A PUBLIC AGENCY
NCPA
NORTHERN CALIFORNIA POWER AGENCY

651 Commerce Drive
Roseville, CA 95678

phone (916) 781-3636
fax (916) 783-7693
web www.ncpa.com

Minutes

Date: July 29, 2021

To: NCPA Commission

From: Cary A. Padgett, Assistant Secretary to the Commission

Subject: NCPA Commission Meeting / Teleconference Minutes

1. Call Meeting to Order and Introductions

Chair David Hagele called the meeting to order at 9:38 am at the Ironstone Vineyards, 1894 Six Mile Road, Murphys, CA. Introductions and roll call were made. Those in attendance are shown on the attached attendance list.

2. Approve Minutes of the July 29, 2021, Regular Commission Meeting

MOTION: A motion was made by Mark Chandler and seconded by Suds Jain to approve the Minutes of the July 29, 2021, Regular Commission Meeting. The motion carried by a majority on a roll call vote of those members present. *San Francisco BART and Truckee Donner were absent.*

PUBLIC FORUM

No comments from the public addressed the Commission.

REPORTS AND COMMITTEE UPDATES

3. General Manager's Business Progress Report and Update

General Manager Randy Howard reported:

- Provided an update on Agency COVID-19 cases. All employee are back at the Headquarters office working full-time and in-person. Employees not fully vaccinated are required to wear a mask when moving throughout the building. Did have three positive cases at the Geothermal facility and reinstated the mask mandate when inside buildings.
- Annual Members visits are going well, with good discussions regarding resources and the challenges each are facing during the summer months.
- The California Department of Water Resources, through the Governor's office, asked NCPA if it could connect a 30 MW portable unit to the Lodi Energy Center and have the unit on stand-by for up to three to five years, and will be used for emergency use only. Staff is in the processing of working through the details on how this will operator and assessing the risk and labor resources.

The use of the unit will be for the state, not NCPA Member use. Other utilities, with gas supply units, have also been approached. The deadline to responsd to their the request by September 1.

- Provided an update on the upcoming NCPA Annual Conference program scheduled at the Silverado in Napa the week of September 27. Registration is open and can be accessed through www.ncpa.com.
- Gave an update on the Federal Policy Conference program, held jointly with the Northwest Public Power Association, scheduled for October 17-20, 2021, in Washington, D.C.
- Mike Brozo, Plumas-Sierra, provided an update on the Dixie Fire located in the Plumas-Sierra REC service territory.

4. Executive Committee

Committee Chair David Hagele reported the Executive Committee met once since the last Commission meeting. The Committee heard reports from the General Manager and General Counsel, reviewed and provided edits on the draft Form Emergency Declaration Resolution for future use if needed, NCPA's current Declaration of Emergency Resolution, and discussed the nominations of the FY21-22 Slate of Officers, which is item 21 on today's agenda. The Executive Committee recommended Commission approval of the FY21-22 Slate of Officers.

The Nominating Committee met and brought to the Executive Committee for approval the nominations of Chair and Vice-Chair of the Legislative and Regulatory Affairs Committee (L&R Committee) and Finance Committee. The Executive Committee approved the appointment of Commissioner Greg Scharff as the new Chair of the L&R Committee and Commissioner Mark Chandler as Vice-Chair, and Commissioner Catalina Sanchez as the new Chair of the Finance Committee. Committee Officers will take office at the regular scheduled Committee meetings in September 2021.

The Committee also met in Closed Session, which are items 23 and 24 on today's agenda. No reportable action was taken. The next Committee meeting is scheduled for August 26.

5. Facilities Committee

Assistant General Manager Tony Zimmer reported the Committee met once since the last Commission meeting. The Committee discussed Items 16-20 on today's agenda. A quorum of the Committee was established, and recommended Commission approval of all items. The next Committee meeting is scheduled for August 4.

6. Finance Committee

Committee Chair Greg Scharff reported the Committee did not meet since the last Commission meeting. The next Committee meeting is scheduled for August 10.

7. Legal Committee

General Counsel Jane Luckhardt reported the Committee met once since the last Commission meeting. The Legal Committee meeting format during NCPA's Annual Conference will be a panel discussion on electric vehicle charging from a utility perspective. The next Committee meeting is scheduled for August 5.

8. Legislative & Regulatory Affairs Committee

Committee Chair Mark Chandler reported the Committee met once since the last Commission meeting. Chair Chandler mentioned registration for the NCPA Annual Conference scheduled September 29-October 1 at the Silverado Resort in Napa is open. Please register soon and secure your accommodations as the room block is filling up. NCPA's Federal Policy Conference is scheduled for

October 17-21, in Washington, D.C. Online registration for this conference will open on August 2 for NCPA and NWPPA Members only.

The L&R Committee has an upcoming Speakers Series session scheduled for August 10 at 9:00 am. This session will feature a discussion with former SMUD General Manager Jan Schori, who has been newly appointed to the California Independent System Operator's Board of Governors. The next Committee meeting is scheduled for August 25.

9. *Members' Announcements & Meeting Reporting*

Chair Hagele, **Healdsburg**, announcement on July 26 the City of Healdsburg put into service its first all-electric garbage truck.

CONSENT CALENDAR

Prior to the roll call vote to approve the Consent Calendar, the Commissioners were polled to determine if any Member wished to pull an item or abstain from one or more items on the Consent Calendar.

No items were pulled from Consent.

MOTION: A motion was made by Mark Chandler, and seconded by Bo Sheppard to approve the Consent Calendar consisting of Items 10, 11, 12, 13, 14, 15, 16, 17, 18, 19, and 20 The motion carried by a majority of those members present on a roll call vote with abstentions noted below for each item. *San Francisco BART and Truckee Donner were absent.*

10. *NCPA's Financials for the Month Ended June 30, 2021* – approve by all Members

11. *Treasurer's Report for the Month Ended June 30, 2021* – accept by all Members.

12. *Disposal of Northern California Power Agency Surplus Property* – note and file by all members the disposal of office furniture and miscellaneous desk accessories.
Fiscal Impact: This report has no direct fiscal impact to the Agency.

13. *Resolution 21-67, Approval of Revisions to NCPA's Personnel Policies and Procedures Manual* – adopt resolution by all members authorizing revisions to NCPA's Personnel Policies and Procedures Manual and delegate authority to the General Manager for implementation.
Fiscal Impact: This report has no direct fiscal impact to the Agency.

14. *Resolution 21-68, Authorize Northern California Power Agency's General Manager to Execute Confirmation Number 0223 for The Energy Federation, Inc., Services to Alameda Municipal Power (AMP), Execute the Corresponding Southern California Public Power Authority Task Order, and Issue a Purchase Order Under the Support Services Program* – adopt resolution by all members authorizing the NCPA General Manager or his designee to execute Confirmation Number 0223 and corresponding Southern California Public Power Authority (SCPPA) Task Order, with any non-substantive changes as approved by the NCPA General Counsel, and issue a Purchase Order to The Energy Federation, Inc., (EFI) for energy efficiency services including an eCommerce marketplace and fulfillment services and downstream rebate processing services.
Fiscal Impact: There is no fiscal impact to NCPA. The services provided by EFI to AMP will be billed to and paid by AMP pursuant to the terms of the Support Services Program Agreement.

NCPA's administrative costs will be reimbursed by AMP.
Redding abstained.

DRAFT

15. ***Resolution 21-69, Central Coast Energy Services, Inc. – Five Year Multi-Task Consulting Services Agreement for income verification services; Applicable to the following: Northern California Power Agency (NCPA), NCPA Members, Southern California Public Power Authority (SCPPA), and SCPPA Members*** – adopt resolution by all members authorizing the General Manager or his designee to enter into a Multi-Task Consulting Services Agreement with Central Coast Energy Services for income verification services, with any non-substantial changes recommended and approved by the NCPA General Counsel, which shall not exceed $1,000,000 over five years, for use by NCPA, NCPA Members, by SCPPA, and SCPPA Members.
Fiscal Impact: Upon execution, the total cost of the agreement is not to exceed $1,000,000 over five years.

16. ***Resolution 21-70, Gannett Fleming, Inc. – Five Year Multi-Task Professional Services Agreement for engineering consulting services; Applicable to the following: All Northern California Power Agency (NCPA) Facilities, NCPA Members, Southern California Public Power Authority (SCPPA), and SCPPA Members*** – adopt resolution by all members authorizing the General Manager or his designee to enter into a Multi-Task Professional Services Agreement with Gannett Fleming, Inc., for engineering consulting services, with any non-substantial changes recommended and approved by the NCPA General Counsel, which shall not exceed $2,500,000 over five years, for use at any facilities owned and/or operated by NCPA, NCPA Members, by SCPPA, and SCPPA Members.
Fiscal Impact: Upon execution, the total cost of the agreement is not to exceed $2,500,000 over five years.

17. ***Resolution 21-71, Cisco Air Systems, Inc. – First Amendment to Five Year Multi-Task General Services Agreement for Specialized OEM Air Compressor Maintenance Services; Applicable to the following: All Northern California Power Agency (NCPA) Facilities, NCPA Members, Southern California Public Power Authority (SCPPA), and SCPPA Members*** – adopt resolution by all members authorizing the General Manager or his designee to enter into a First Amendment to the Multi-Task General Services Agreement with Cisco Air Systems, Inc., for specialized OEM air compressor maintenance services, with any non-substantial changes recommended and approved by the NCPA General Counsel, extending the agreement expiration from July 29, 2021, to October 21, 2021, for continued use at any facilities owned and/or operated by NCPA, NCPA Members, by SCPPA, and SCPPA Members.
Fiscal Impact: Upon execution, the total cost of the agreement will remain unchanged at not to exceed $500,000 over the remainder of the contract term.

18. ***Resolution 21-72, Airstrike Bird Control, Inc. – Five Year General Services Agreement for Bird Control Related Services; Applicable to the following: All Northern California Power Agency (NCPA) Facilities*** – adopt resolution by all members authorizing the General Manager or his designee to enter into a sole source General Services Agreement with Airstrike Bird Control, Inc., for bird control related services, with any non-substantial changes recommended and approved by the NCPA General Counsel, which shall not exceed $400,000 over five years, for use at any facilities owned and/or operated by NCPA.
Fiscal Impact: Upon execution, the total cost of the agreement is not to exceed $400,000 over five years. The 5-year maintenance program cost is $242,814.00 with the ability to contract for additional intensive services as needed. Funds for these services are included in the maintenance budget for both CT2 and LEC. Purchase orders referencing the terms and conditions of the agreement will be issued for any needed additional intensive services at CT2/LEC or at other NCPA locations.
Redding abstained.

19. ***Resolution 21-73, Alliant Insurance Services, Inc. – Five Year Multi-Task Consulting Services Agreement for Professional Insurance Brokerage Services; Applicable to the Northern California Power Agency (NCPA)*** – adopt resolution by all members authorizing the General Manager or his designee to enter into a Five-Year Multi-Task Consulting Services Agreement with Alliant Insurance Services, Inc., for professional insurance brokerage services, applicable to all facilities owned and operated by NCPA, with any non-substantial changes recommended and approved by the NCPA General Counsel, which shall not exceed $800,000 over five years.
Fiscal Impact: Upon execution, the total cost of the agreement shall not to exceed $800,000 including approximately 10% for contingency related items over five years. Purchase orders referencing the terms and conditions of the agreement will be issued following NCPA procurement policies and procedures. The insurance brokerage services are included in the current fiscal year Risk Management budget.

20. ***Resolution 21-75, Admission of the San Francisco Bay Area Rapid Transit District as a New Participant in the Natural Gas Program Agreement*** – adopt resolution by all members authorizing the admission of the San Francisco Bay Area Rapid Transit District (BART) as a new Participant in the Natural Gas Program Agreement upon BART's execution of the Natural Gas Program Agreement.
Fiscal Impact: NCPA's costs for development and administration of the Natural Gas Program Agreement will be allocated to Members in accordance with the Natural Gas Program Agreement and approved cost allocation methodologies as described in the NCPA annual budget.

DISCUSSION / ACTION ITEMS

21. ***Resolution 21-74, Nomination of the FY 2021-22 Slate of Officers and At-Large Executive Committee Members*** – adopt resolution by all members approving the election of the FY 2021-22 Slate of Officers for the positions of Chair and Vice Chair, and four (4) Commissioners as at-large Executive Committee Members. The FY2021-22 Slate of Officers are David Hagele as Chair, Jerry Serventi as Vice Chair, and Mark Chandler, Jenelle Osborne, Pauline Roccucci, and Greg Scharff, as Executive Committee Members.
Fiscal Impact: No monetary impact to the Agency is expected to result from this action.

Chair Hagele reported the Executive Committee met and recommended Commission approval of the proposed FY 21-22 Slate of Officers as noted below. Chair Hagele opened the floor for nominations. No other nominations were given. Officers and at-large representatives will take office at the regular scheduled meeting of the Commission on October 1, 2021.

Chairman	David Hagele
Vice-Chair	Jerry Serventi
Executive Committee member	Mark Chandler
Executive Committee member	Pauline Roccucci
Executive Committee member	Jenelle Osborne
Executive Committee member	Greg Scharff

Motion: A motion was made by Suds Jain, and seconded by Greg Scharff to adopt resolution approving the election of the FY 2021-22 Slate of Officers for the positions of Chair and Vice-Chair, and four Commissioners as at-large Executive Committee Members; David Hagele as Chair, and Jerry Serventi as Vice-Chair, with Mark Chandler, Jenelle Osborne, Pauline Roccucci, Greg Scharff, as Executive Committee Members. Motion carried by a majority on a roll call vote of those members present. *San Francisco BART, Shasta Lake, Truckee Donner and Ukiah were absent.*

22. ***Resolution 21-76, Commemorating the 125th Anniversary of the Electric Utility of the City of Santa Clara*** – adopt resolution by all members commending the 125th Anniversary of the Electric Utility of the City of Santa Clara.

Chair Hagele read the resolution commemorating the 125th Anniversary of the Electric Utility of the City of Santa Clara.

23. Motion: A motion was made by Suds Jain and seconded by Greg Scharff to adopt resolution commending the 125th Anniversary of the Electric Utility of the City of Santa Clara. The motion carried by a majority on a roll call vote of those members present. *San Francisco BART, Shasta Lake, Truckee Donner, and Ukiah were absent.*

Non-essential Members and NCPA staff left the meeting for closed session discussion.

CLOSED SESSION

24. **CONFERENCE WITH LEGAL COUNSEL** – Existing litigation pursuant to Government Code Section 54956.9(d)(1): Name of case: *Northern California Power Agency, City of Redding, City of Roseville, and City of Santa Clara v. the United States*, Court of Federal Claims No. 14-817C.

25. **CONFERENCE WITH LEGAL COUNSEL** – Existing litigation pursuant to Government Code Section 54956.9(d)(1): Name of case: *In Re PG&E Corporation and Pacific Gas and Electric Company, Debtors; United States Bankruptcy Court, Northern District of California*, Case Nos. 19-30088 (Lead Case) and 19-30089 DM.

RECONVENED TO OPEN SESSION

All meeting attendees rejoined the public meeting.

REPORT FROM CLOSED SESSION

Closed Session Disclosure: General Counsel Jane Luckhardt stated there was no reportable action taken in Closed Session.

NEW BUSINESS

No new business was discussed.

ADJOURNMENT

The July 29, 2021, Commission meeting was adjourned at 10:37 am by Chair Hagele.

Respectfully submitted,
//
DAVID HAGELE
Commission Chair

Prepared by,
//
CARY A. PADGETT
Assistant Secretary to the Commission

Attachments

Northern California Power Agency
Commission Meeting / Teleconference
July 29, 2021
COMMISSIONERS
Attendance List

NCPA Commissioners are requested to sign, but signature by members of the public is voluntary.

MEMBER	NAME
1 - ALAMEDA	Jerry Serventi
2 - BIGGS	Bo Sheppard
3 - GRIDLEY	Catalina Sanchez
4 - HEALDSBURG	Chair David Hagele
5 - LODI	Mark Chandler
6 - LOMPOC	Jenelle Osborne
7 - PALO ALTO	Greg Scharff
8 - PORT OF OAKLAND	Jared Carpenter
9 - PLUMAS-SIERRA REC	Mike Boro
10 - REDDING	Julie Winter
11 - ROSEVILLE	Pauline Roccucci
12 - SAN FRANCISCO BAY AREA RAPID TRANSIT DISTRICT	
13 - SANTA CLARA	Sudhanshu Jain
14 - SHASTA LAKE	James Takehara
15 - TRUCKEE DONNER	
16 - UKIAH	Mel Grandi

Northern California Power Agency
Commission Meeting / Teleconference
July 29, 2021
Attendance List

NCPA Commissioners, Alternates & Staff are requested to sign, but signature by members of the public is voluntary.

NAME	AFFILIATION
Nico Procos	Alameda
Mark Sorensen	Biggs
Cliff Wagner	Gridley
CJ Berry	Lompoc
Michelle Bertolino	Roseville
Kathy Watanabe	Santa Clara
Basil Wong	Silicon Valley Power
Randy Howard	NCPA
Jane Cirrincione	NCPA
Monty Hanks	NCPA
Joel Ledesma	NCPA
Jane Luckhardt	NCPA
Tony Zimmer	NCPA
Cary Padgett	NCPA
Randy Bowersox	NCPA
Elizabeth Gonzalez	NCPA

NORTHERN CALIFORNIA POWER AGENCY
COMMISSION ROLL CALL VOTE

TOPIC: Minutes

	Vote	Abstain	Absent
Alameda	Y		
Biggs	Y		
Gridley	Y		
Healdsburg	Y		
Lodi	Y		
Lompoc	Y		
Palo Alto	Y		
Plumas-Sierra	Y		
Port of Oakland	Y		
Redding	Y		
Roseville	Y		
Santa Clara	Y		
San Francisco BART			X
Shasta Lake	Y		
Truckee Donner			X
Ukiah	Y		

Passed and adopted 29th day of July 2021, by the above vote on roll call.

ATTEST: _____
CARY A. PADGETT
Commission Assistant Secretary

CONSENT CALENDAR

All items on the Consent Calendar are considered routine and will be approved without discussion by a single-roll call vote. Any Commissioner or member of the public may remove any item from the Consent Calendar. If an item is removed, it will be discussed separately following approval of the remainder of the Consent Calendar.

Prior to the roll call vote to approve the Consent Calendar, the Commissioners will be polled to determine if any Member wishes to abstain from one or more items on the Consent Calendar.

CONSENT CALENDAR ROLL-CALL APPROVAL

Commission Meeting Date: 7/29/21

Consent Items Listed on the Agenda: # 10 to # 20

Consent Items Removed from the Agenda and Approved Separately:

9 & LODI / BIGGS

ROLL-CALL VOTE BY MEMBERS:

Member	Item Numbers Abstained	Vote	Absent
Alameda		Y	
Biggs		Y	
Gridley		Y	
Healdsburg		Y	
Lodi		Y	
Lompoc		Y	
Palo Alto		Y	
Port of Oakland		Y	
Redding	14, 18	Y	
Roseville		Y	
San Francisco BART			X
Santa Clara		Y	
Shasta Lake			X
Truckee Donner			X
Ukiah		Y	
Plumas-Sierra		Y	

ATTEST: CAP

Cary A. Padgett, Commission Assistant Secretary

NORTHERN CALIFORNIA POWER AGENCY
COMMISSION ROLL CALL VOTE

TOPIC: Resolution 21-74

	Vote	Abstain	Absent
Alameda	Y		
Biggs	Y		
Gridley	Y		
Healdsburg	Y		
Lodi	Y		
Lompoc	Y		
Palo Alto	Y		
Plumas-Sierra	Y		
Port of Oakland	Y		
Redding	Y		
Roseville	Y		
Santa Clara	Y		
San Francisco BART			
Shasta Lake			X
Truckee Donner			X
Ukiah			X

Passed and adopted 29th day of July 2021, by the above vote on roll call.

ATTEST: _____
CARY A. PADGETT
Commission Assistant Secretary

NORTHERN CALIFORNIA POWER AGENCY
COMMISSION ROLL CALL VOTE

TOPIC: Resolution 21-76

	Vote	Abstain	Absent
Alameda	Y		
Biggs	Y		
Gridley	Y		
Healdsburg	Y		
Lodi	Y		
Lompoc	Y		
Palo Alto	Y		
Plumas-Sierra	Y		
Port of Oakland	Y		
Redding	Y		
Roseville	Y		
Santa Clara	Y		
San Francisco BART			X
Shasta Lake			X
Truckee Donner			X
Ukiah	Y		

Passed and adopted 29th day of July 2021, by the above vote on roll call.

ATTEST: _____
CARY A. PADGETT
Commission Assistant Secretary

SUPPORT SERVICES PROGRAM STATUS REPORT August 19, 2021			
Member Name	***Designated Representatives***	***Confirmation NTE Amount***	***Date Approved***
Alameda - AMP	General Manager & AMP General Counsel	$ 75,000	06/08/16
BART			
Biggs	Utility Director & City Attorney	$ 125,000	08/09/16
Gridley			
Healdsburg	City Manager & City Attorney	$ 50,000	05/06/19
Lodi	Utility Director & City Attorney NTE $15,000; City Manager & City Attorney NTE $20,000	$ 20,000	09/07/16
Lompoc	Utility Director & City Attorney	$ 125,000	11/15/16
Palo Alto	City Manager & City Attorney	$ 85,000	06/05/17
Plumas-Sierra REC			
Port of Oakland	Executive Director & Deputy Port Attorney	$ 150,000	04/14/16
Redding	Utility Director & City Attorney Procurement Authority Increased	 $ 200,000	04/19/16; 08/20/20
Roseville	Electric Utility Director & City Attorney	$ 74,999	10/05/15; 05/05/21
Santa Clara	City Manager & City Attorney	$ 150,000	05/24/16
Shasta Lake	City Manager & General Counsel	$ 75,000	07/02/19
Truckee Donner PUD	General Manager & General Counsel NTE $15,000; General Manager, General Counsel & Board President NTE $250,000	$ 250,000	11/02/16
Ukiah			

SSPA CONFIRMATIONS EXECUTED/WORK IN PROGRESS				
No.	***Member Name***	***Date***	***Amount NTE***	***Vendor Name & Short Description***
0229	City of Lompoc	8/2/21	$ 71,470.00	MFP Connect, LLC; Services re electric line extensions including conceptual framework, interviews with staff, reporting, policies, and development of rules and regulations.

No.	*Member Name*	*Date*	*Amount NTE*	*Vendor Name & Short Description*
0228	City of Palo Alto	7/14/21	$ 11,950.00	Frontier Energy, Inc.; kitchen energy efficiency services for up to five restaurants to support electrification efforts.
0225-H	City of Healdsburg	8/2/21	$ 5,469.50	Norcal Power Services, LLC; Work to 15kv 600A Westinghouse feeder breaker by replacing the closing mechanism, testing operations and timing curves of CO-9 relays.
0225	City of Roseville	8/2/21	$167,716.00	Plug In America; provide EV education in-person and virtual events and EV advocate trainings; provide Dealer Incentive Program including training, engagement, certificate pricing, license fees, incentive funds, and program management.
0224	City of Healdsburg	7/1/21	$ 9,394.00	HOT/SHOT Infrared Inspections Inc.; infrared inspections of one substation and overhead 12kv distribution system.
0221	City of Lompoc	6/7/21	$ 57,500.00	Hometown Connections, Inc.; services to facilitate the development of a Strategic Plan through HCI planning process and preparation of final plan document.
0220	City of Shasta Lake	6/2/21	$ 9,348.00	TRC Solutions Inc.; independent third-party evaluation of the City's Physical Security Plan consistent with CPUC Decision 19-01-018.
0219	City of Redding	6/29/21	$312,820.00	Quest Media & Supplies, Inc.; for design services for Fiber Optic Infrastructure Project including site walks, baseline drawings, update every pole drawing, full permit package for project compliant with public works requirements.
0218	City of Redding	6/15/21	$200,785.00	Bell Burnett & Associates; consulting services to prepare Mitigation Implementation Plan and conduct review of REU's Capital Program and make recommendations about most efficient means of implementation.
0216	Port of Oakland	5/12/21	$ 7,973.00	TRC Solutions, Inc.; for independent third-party evaluation of Physical Security Plan per CPUC Decision 19-01-018.
0215	Port of Oakland	5/18/21	$34,675.00	Black & Veatch, Inc.; engineering and substation support services including analysis of diagrams and other substation information to assist with PG&E application and distribution planning.

No.	*Member Name*	*Date*	*Amount NTE*	*Vendor Name & Short Description*
0208	Port of Oakland	4/7/21	$ 59,815.00	AESI US, Inc.; provide development of Physical Security Plan in its entirety per CPUC Decision No. 19-01-018.
0205	City of Santa Clara	4/27/21	$64,220.00	Cadmus Group LLC; review and evaluate SVP's FY21 Room Air Cleaner Program which offers rebates to residential customers for up to three ENERGY STAR certified room air cleaners.
0204	City of Lompoc	3/30/21	$125,000.00	MFP Connect, Inc.; provide personnel services to lead special project-onboard energy consultant with extensive T&D experience to assess system health, recommend/prioritize critical path maintenance, develop comprehensive CIP and additional duties as requested by UD.
0198	City of Redding	12/14/20	$124,325.00	Ulteig; Consulting services for development of a 10-year distribution modernization program and associated 5-year capital improvement plan for REU.
0197	Alameda Municipal Power	12/1/20	$ 69,380.00	Hometown Connections, Inc.; Review of AMP's organizational structure and preparation of report.
0192	City of Redding	11/19/20	$ 76,840.00	GDS Associates, Inc.; Services re: REU's Energy Efficiency Integrated Resource Plan with ultimate goal being the development of final report that provides recom-mendation of preferred portfolio, identifies potential funding sources and approximate budgets through 2030.
0189	City of Redding	10/7/20	$ 84,305.00	Hometown Connections, Inc.; Provide strategic planning facilitation services.
0186	Alameda Municipal Power	9/21/20	$ 75,000.00	Flynn Resource Consultants, Inc.; Continued services related to electric transmission issues, grid planning, load levels, regulatory matters, litigation support, and other services as requested in FY21.
0185	City of Santa Clara	9/14/20	$119,822.70	Cadmus Group LLO; Energy efficiency services for SVP's Rebate Programs.
0179	Alameda Municipal Power	7/28/20	$ 67,500.00	Cooperative Response Center; Overflow telephone solution during after-hours or outage situations FY21.

No.	Member Name	Date	Amount NTE	Vendor Name & Short Description
0166	City of Palo Alto	7/1/20	$ 73,325.00	Energy & Research Solutions; energy efficiency consulting services including energy savings calculation review, rebate application review, business energy audits and technical advice.
0157	City of Lodi	4/28/20	$154,480.00	Cooperative Response Center; Overflow telephone solution during after-hours or outage situations 24-month period.
0117 Amd.	City of Lodi	8/22/19 1/20/21	$275,811.00	Burns & McDonnell; engineering design and environmental analysis for the PG&E Northern San Joaquin 230 kV Transmission Project to be incorporated into PG&E's PEA.
0080	City of Roseville	7/11/18	$148, 084.00	Siemens Energy, Inc.; Year 3 of 5-year T-3000 Maintenance Program
0079	City of Redding	7//10/18	$ 64,223.09	Siemens Energy, Inc.; Year 3 of 5-year T-3000 Maintenance Program.
SSA CONFIRMATIONS EXECUTED AND IN PROGRESS (SCPPA CONTRACTS)				
No.	***NCPA Member***	***Date***	***Amount***	***Vendor Name & Short Description***
0200	City of Lompoc	5/18/21	$ 90,850.00	Efficiency Services Group; For "Keep Your Cool" Refrigeration Program services in FY 21.

A PUBLIC AGENCY
NCPA
NORTHERN CALIFORNIA POWER AGENCY

651 Commerce Drive
Roseville, CA 95678

phone (916) 781-3636
fax (916) 783-7693
web www.ncpa.com

Commission Staff Report

AGENDA ITEM NO.: 5

Date: August 26, 2021

To: NCPA Commission

Subject: August 4, 2021 Facilities Committee Meeting Minutes

The attached Draft Minutes are being provided for information and to augment the oral Committee report.

A PUBLIC AGENCY
NCPA
NORTHERN CALIFORNIA POWER AGENCY

651 Commerce Drive
Roseville, CA 95678

phone (916) 781-3636
fax (916) 783-7693
web www.ncpa.com

Minutes – Draft

Date: August 4, 2021

To: NCPA Facilities Committee

From: Michelle Schellentrager

Subject: August 4, 2021 Facilities Committee Meeting Minutes

1. **Call Meeting to Order & Roll Call** – The meeting was called to order by Committee Chair Basil Wong (Santa Clara) at 9:05 am. Roll call was taken. Attending via teleconference and on-line presentation were Alan Harbottle (Alameda), Catalina Sanchez and Cliff Wagner (Gridley), Terry Crowley (Healdsburg), Jiayo Chiang (Lodi), Matthew MacDonald (Lompoc), Shiva Swaminathan and Jim Stack (Palo Alto), Mike Brozo (Plumas-Sierra), Jared Carpenter (Port of Oakland), Nick Rossow (Redding), Brian Schinstock (Roseville), and Paulo Apolinario and Steve Hance (Santa Clara), and Willie Manuel and Owen Goldstrom (TID) also attended via teleconference. Those attending in person are listed on the attached Attendee Sign-in Sheet. Committee Representatives from BART, Biggs, and Ukiah were absent. A quorum of the Committee was established.

PUBLIC FORUM
No public comment.

OPEN SESSION

DISCUSSION / ACTION ITEMS

2. **Approval of Minutes from July 7, 2021 Facilities Committee Meeting.**

   Motion: A motion was made by Terry Crowley and seconded by Jiayo Chiang recommending approval of the July 7, 2021 Facilities Committee meeting minutes. A vote was taken by roll call: YES = Alameda, Gridley, Healdsburg, Lodi, Lompoc, Redding, Roseville, and Santa Clara. The motion passed.

3. **NCPA 2022 Plant Outage Schedule** – Staff reviewed the scheduling process and Maintenance Scope and Considerations with the Committee again.

   The Annual Maintenance Scope includes activities related to regulatory compliance, electrical, mechanical, and civil type of work. Considerations which went into development of the 2022 Outage Schedule included outage balance factors (cost, mother nature/weather impacts, and market impact and impact to grid sensitivity). Staff also factored in avoiding months where load could be a factor, as well as contractor availability.

Outages for each Plant were reviewed in depth with the Committee, including dates selected and background on what activities were scheduled to take place during each outage. As requested based on feedback from Members, the Geo Plant 2, Unit 4 outage was moved from the original Oct/Nov timeframe to Nov/Dec to avoid overlap with the maintenance outages scheduled at Collierville. Gridley expressed concern surrounding the move of the Geo Plant 2 Outage. Tony Zimmer reiterated the potential negative impacts in having the Geo Plant 2 outage overlap with the Collierville outages, including the likelihood that project participants would have to purchase Alternative Capacity to offset shortages in their portfolios if the outages overlapped. There were no further questions from the Committee.

Motion: A motion was made by Brian Schinstock and seconded by Cataline Sanchez recommending approval of the NCPA 2022 Plant Outage Schedule for submission to the CAISO. A vote was taken by roll call: YES = Alameda, Gridley, Healdsburg, Lodi, Lompoc, Palo Alto, Plumas-Sierra, Redding, Roseville, Santa Clara, and TID. The motion passed.

4. **All NCPA Facilities, Members, SCPPA – Hart High Voltage Apparatus Repair and Testing Co., Inc. MTGSA** – Staff presented background information and was seeking a recommendation for Commission approval of a five-year Multi-Task General Services Agreement with Hart High Voltage Apparatus Repair and Testing Co., Inc. for specialized electrical services, with a not to exceed of $3,000,000, for use at all facilities owned and/or operated by NCPA, NCPA Members, by SCPPA, and SCPPA Members. All purchase orders will be issued following NCPA procurement policies and procedures.

   NCPA currently has an agreement in place with Hart High Voltage Apparatus Testing and Repair Co., Inc., which is expiring in October 2021. NCPA has used this vendor for maintenance work related to electrical equipment at its CT Plants in the past. NCPA desires to renew this agreement so established terms and conditions are kept in place should this vendor be the successful bidder on future projects. NCPA has agreements in place for similar services with Eaton Corporation, Electrical Maintenance Consultants, Inc., and Gannett Fleming, Inc. This enabling agreement does not commit NCPA to any expenditure of funds. A draft Commission Staff Report and draft agreement were available for review. It is recommended to place this item on the Commission Consent Calendar.

   Motion: A motion was made by Terry Crowley and seconded by Jiayo Chiang recommending Commission approval authorizing the General Manager or his designee to enter into a Multi-Task General Services Agreement with Hart High Voltage Apparatus Testing and Repair Co., Inc. for specialized electrical maintenance services, with any non-substantial changes recommended and approved by the NCPA General Counsel, which shall not exceed $3,300,000 over five years, for use at any facilities owned and/or operated by NCPA, NCPA Members, by SCPPA, and SCPPA Members. A vote was taken by roll call: YES = Alameda, Gridley, Healdsburg, Lodi, Lompoc, Palo Alto, Plumas-Sierra, Redding, Roseville, Santa Clara, and TID. The motion passed.

5. **All NCPA Facilities, Members, SCPPA – Cisco Air Systems, Inc. MTGSA** – Staff presented background information and was seeking a recommendation for Commission approval of a five-year Multi-Task General Services Agreement with Cisco Air Systems, Inc. for specialized OEM air compressor maintenance services, with a not to exceed of $1,000,000, for use at all facilities owned and/or operated by NCPA, NCPA Members, by SCPPA, and SCPPA Members. All purchase orders will be issued following NCPA procurement policies and procedures.

   NCPA currently has an agreement in place with Cisco Air Systems, Inc. NCPA's CT Plant solicits bids for ongoing OEM air compressor preventative maintenance services each year, and Cisco Air Systems, Inc. is continuously the successful bidder for the services. NCPA desires to renew this agreement so established terms and conditions are kept in place should this vendor be the

successful bidder on future projects. NCPA has an agreement in place for similar services with California Compression, LLC. This enabling agreement does not commit NCPA to any expenditure of funds. A draft Commission Staff Report and draft agreement were available for review. It is recommended to place this item on the Commission Consent Calendar.

Motion: A motion was made by Mike Brozo and seconded by Steve Hance recommending Commission approval authorizing the General Manager or his designee to enter into a Multi-Task General Services Agreement with Cisco Air Systems, Inc. for specialized air compressor maintenance services, with any non-substantial changes recommended and approved by the NCPA General Counsel, which shall not exceed $1,000,000 over five years, for use at any facilities owned and/or operated by NCPA, NCPA Members, by SCPPA, and SCPPA Members. A vote was taken by roll call: YES = Alameda, Gridley, Healdsburg, Lodi, Lompoc, Palo Alto, Plumas-Sierra, Redding, Roseville, Santa Clara, and TID. The motion passed.

6. **All NCPA Facilities, Members, SCPPA – Flynn Resource Consultants, Inc. MTCSA** – Staff presented background information and was seeking a recommendation for Commission approval of a Multi-Task Consulting Services Agreement with Flynn Resource Consultants, Inc. (Flynn RCI) for services related to electric transmission, power generation, regulatory support, contracts, compliance, and electric market issues, with a not to exceed of $3,000,000, for use at all facilities owned and/or operated by NCPA, NCPA Members, by SCPPA, and SCPPA Members. All purchase orders will be issued following NCPA procurement policies and procedures.

   NCPA currently has an agreement in place with Flynn Resource Consultants, Inc, which expires on August 17. BART and Alameda have used Flynn Resource Consultants, Inc. frequently in the past for general regulatory support related services. NCPA desires to renew this agreement so established terms and conditions are kept in place should this vendor be the successful bidder on future projects. This enabling agreement does not commit NCPA to any expenditure of funds. A draft Commission Staff Report and draft agreement were available for review. It is recommended to place this item on the Commission Consent Calendar.

   Motion: A motion was made by Alan Harbottle and seconded by Steve Hance recommending Commission approval authorizing the General Manager or his designee to enter into a Multi-Task Consulting Services Agreement with Flynn Resource Consultants, Inc. for services related to electric transmission, power generation, regulatory support, contracts, compliance, and electric market issues, with any non-substantial changes recommended and approved by the NCPA General Counsel, with a not to exceed of $3,000,000, for use at all facilities owned and/or operated by NCPA, NCPA Members, by SCPPA, and SCPPA Members. A vote was taken by roll call: YES = Alameda, Gridley, Healdsburg, Lodi, Lompoc, Palo Alto, Plumas-Sierra, Redding, Roseville, Santa Clara, and TID. The motion passed.

7. **Scheduling Coordination Program Agreement Appendix B** – Staff presented background information and was seeking a recommendation for Commission approval of updates to Appendix B (new version 24) of the Scheduling Coordination Program Agreement.

   Staff reviewed Appendix B and how it relates to CAISO settlements for members' aggregated loads and jointly owned resources. Modifications are occasionally necessary to keep up with CAISO's evolving market settlement design changes, and to accurately reflect NCPA's business model that operates as a Load Following Metered Subsystem Aggregator (MSSA).

   Staff reviewed each of the proposed modifications to be made to Appendix B of the SCPA, including reviewing the corresponding page number where the changes could be found, as well as a description regarding each change (including the type of change and whom each change

applies to). In cases where the redline effective dates occur prior to date of approval, those changes will be applied retroactively.

Motion: A motion was made by Jiayo Chiang and seconded by Shiv Swaminathan recommending Commission approval of updates to Appendix B (new version 24) of the Scheduling Coordination Program Agreement, that include new and retired settlement charge codes, as well as minor updates and revisions to various charge codes. A vote was taken by roll call: YES = Alameda, Gridley, Healdsburg, Lodi, Lompoc, Palo Alto, Plumas-Sierra, Redding, Roseville, Santa Clara, and TID. The motion passed.

8. **NCPA Geothermal Facility – Sulphur Cake Bin Classification Standard** – Staff presented background information and was seeking a recommendation for Commission approval of Amendment to Resolution 16-89 authorizing re-classification standards of sulfur levels for the Geothermal Plant Facility, delegating authority to the General Manager or his designee to sell non-hazardous sulfur product as a soil amendment, increasing the threshold of allowable vanadium content in the sulfur cakes produced at NCPA's Geothermal facility from the current threshold limit of 10 mg/L or 100 mg/kg to a new threshold limit of 22mg/L or 220 mg/kg, to align with current industry standards.

   Staff reviewed with the Committee its process for producing the dry sulfur cakes at its Geothermal facility, as well as the testing process for determining the vanadium content levels of the sulfur cakes produced. Staff presented a table which displayed the historical sulfur bin vanadium levels from 2017 – present, which indicated that current thresholds fall far below the proposed revised limits. The economic impacts of modifying the current vanadium threshold levels were presented as well. There would be both a savings in terms of disposal costs, as well as a small increase in revenue from selling additional clean sulfur cakes.

   Members wanted to know if there was any risk (specifically as its relates to liability) in increasing the vanadium levels. Staff explained that NCPA has determined that transporting materials labeled as "hazardous" based on NCPA's current threshold limits (despite being far below the EPA limits) carries more risk.

   Motion: A motion was made by Cataline Sanchez and seconded by Terry Crowley recommending Commission approval of Amendment to Resolution 16-89 authorizing re-classification standards of sulfur levels for the Geothermal Plant Facility, delegating authority to the General Manager or his designee to sell non-hazardous sulfur product as a soil amendment, increasing the threshold of allowable vanadium content in the sulfur cakes produced at NCPA's Geothermal facility from the current threshold limit of 10 mg/L or 100 mg/kg to a new threshold limit of 22mg/L or 220 mg/kg, to align with current industry standards. A vote was taken by roll call: YES = Alameda, Gridley, Healdsburg, Lodi, Redding, Roseville, Santa Clara, and TID. ABSTAIN = Palo Alto. The motion passed.

9. **SFWPA PPA and Third Phase Agreement** – Staff reviewed the scope of the project, including all of the units which make up the South Feather Power Project (SFPP). The SFPP is made up of the Forbestown Powerhouse (a 37.5 MW Hydroelectric Facility), the Kelly Ridge Powerhouse (an 11.0 MW Hydroelectric Faculty), Sly Creek (a 12.0 MW Hydroelectric Facility) and the Woodleaf Powerhouse (a 60.0 MW Hydroelectric Facility). Pacific Gas & Electric (PG&E) currently operates the project, but effective December 31, 2021 at midnight their current agreement will terminate (that date is the go live date for NCPA to begin dispatching the project).

   If the Power Purchase Agreement moves forward, the South Feather Water Power Agency (SFWPA) will continue to own, operate, and maintain the SFPP, while NCPA will act as the scheduling coordinator and dispatch the resources. The initial term of the SFWPA Power

Purchase Agreement would run through December 31, 2031. Staff explained a longer initial term was important to ensure that RPS will count towards the project participants' long-term RPS reqs. Staff reviewed key provisions in the Power Purchase Agreement, including the compensation/settlement terms, and how RA Capacity payments and rates will be calculated. Staff also shared a table which outlines the compensation structure. Staff anticipates that this project will provide participants with fairly stable revenue stream.

In conjunction with the Power Purchase Agreement, NCPA will execute a Third Phase Agreement with the participating members which will enable NCPA to enter into the Power Purchase Agreement with SFWPA. Key provisions of the Third Phase Agreement were reviewed with the Committee.

Staff also reviewed the current project participation percentages with the Committee, and explained the methodology used in developing the percentages. Members wanted to know if NCPA would consider allowing additional members to join the project. Staff responded that further discussion regarding additional member project participants would take place in the upcoming Utility Director's Meeting, but that it could be difficult to add additional participants this late in the process, given the aggressive timeline for approvals to make sure NCPA would be ready to take over the project by the go live date.

Staff reviewed next steps, including the anticipated approval schedule for the PPA, as well as the approval schedule for each member project participant to execute the Third Phase Agreement. The PPA will be presented for approval by the NCPA Commission in its August 26, 2021 meeting. All member project participants will need to have the Third Phase Agreement approved and executed by mid-October at the latest.

Prior to making a motion, there was a discussion regarding the likelihood of the project participant percentages changing before Commission approval. Members requested that NCPA amend the motion to reflect that the Committee was recommending approval with the understanding that these numbers may be adjusted prior to Commission approval.

Motion: A motion was made by Steve Hance and seconded by Jiayo Chiang recommending Commission approval of the South Feather Water and Power Agency (SFWPA) Power Purchase Agreement (PPA) and Third Phase Agreement, as presented at the Facilities Committee meeting on August 4, 2021, including any non-substantial changes as recommended and approved by the NCPA General Counsel. This recommendation is based on the understanding that the final project participation percentages as presented in the Third Phase Agreement may be further refined prior to being presented to the Commission for consideration and approval. A vote was taken by roll call: YES = Healdsburg, Lodi, Lompoc, Palo Alto, Plumas-Sierra, Port of Oakland, Roseville, and Santa Clara. ABSTAIN = Alameda, Gridley, Redding, TID. The motion passed.

INFORMATIONAL ITEMS

10. **New Business Opportunities** – Staff stated that they continue to explore new business opportunities, including Glover Solar, and the McCloud Solar PPA, however, there were no new developments shared with the Committee at this time.

11. **NERC Alert – Extreme Cold Weather Events** – Staff provided notice to the Committee that the NERC had released a NERC Alert regarding cold weather preparations and the upcoming development of new standards regarding winterization requirements for Generation Operators and Owners. Staff reviewed NCPA's proposed responses to the survey NERC had distributed regarding Extreme Cold Weather Events. It was noted that the survey was at times very vague. Staff also noted that it does not appear that any new standards developed around this issue would

require new equipment installations, but would instead likely result in requirements for operators to identify mitigation methods.

12. **NCPA Generation Services Plant Updates** – Plant Staff provided the Committee with an update on current plant activities and conditions.

Geo – There were no safety recordable incidents to report for the month of July. There was one near-miss incident from a breaker failure. Safety training is 62.7% complete. The average net generation for the month was 95.4 MW. Fiscal year net generation exceeded the FY 2021 goal of 419 GWh by 5.7% at 443 GWh. The Southeast Geysers Effluent Project (SEGEP) will not be online until mid-August due to freshwater not being available as a result of ongoing draught conditions. The California Energy Commission recently has representatives tour the Geo facility. Ongoing maintenance activities were reviewed with the Committee. The Plant 1 Fire Protection Project continues, with ORR Protection beginning work on Phase 2 of the project. The Plant 1 HVAC Project is almost complete, with SitelogIQ scheduled to commission the system next week.

Hydro – There was a 6.0 magnitude earthquake which occurred on July 8, 2021. Immediately following the earthquake, staff reviewed the established inspection criteria and protocols. The estimated magnitude of the earthquake would not normally result in required inspection of NCPA's hydroelectric facilities, however, Staff moved forward with inspections; no damage was found at any of NCPA's hydroelectric facilities. The Henry Fire near Spicer Reservoir has been 100% contained, with no damage to any NCPA equipment or facilities. NSM is currently in a PG&E transmission induced outage that started July 1, 2021 to work on cables that are in a very rugged and hard to access canyon. PG&E estimates complain of this work around August 23. The New Spicer Meadows campground had a well failure attached to the potable water system, which required the deep well pump to be pulled and replaced. Staff is monitoring ongoing flash flood warnings at higher elevations due to forecasted thunderstorms in the area. The Murphys office HVAC and energy efficiency improvement project has been completed successfully.

CTs – July was another busy month for the CTs, with 21 forecasted starts for both CT1 and 7 for CT2. CT1 had 37 actual starts, and 23 ghost starts bringing the FYTD total to 60. CT2 had 22 actual starts this month brining the FYTD total to 22 starts. There was one forced outage for CT1 LOD Gas Compressor. There were no planned outages for the month of July. The approximate margin for the heat event for CT1 is $600,000, and for CT2 is $430,000. Real-Time CT1 Lodi had 6 starts dispatched as a loss, $9,243 bid cost recovery.

13. **Planning and Operations Update**

Current Resource Integration Activities Include

- SFWPA (Members) – December 19, 2021
- Sky River Wind (BART) – September 1, 2021
- Slate 1 Solar (BART) – October 31, 2021
- Ukiah Mendocino Hydro (Ukiah) – Ongoing
- Antelope Solar (NCPA) – December 1, 2021
- Camp Far West (SVP) – Q4, 2021
- Henrietta D Energy Storage – TBD

California State Emergency Program (CSEP)

- State seeking eligible participants to be compensated for incremental load reduction
- Program the result of concerns in market conditions due to ongoing drought
- Program to be administered by utilities, with compensation provided by the State
- Compensation for Standby Service: $0.75/kWh, Load Reduction: $2/kWh
- August 15 deadline for participant sign up

- NCPA Staff will schedule a phone call with select Members to discuss further

Portable Gas Generators at LEC

- The Governor's office approached NCPA regarding placement of portable gas generators near/next to LEC
- CDWR is taking the lead
- If it looks like this will move forward, NCPA will present additional information to Committees for review.

14. Next Meeting – The next Facilities Committee meeting is scheduled for September 1, 2021.

ADJOURNMENT

The meeting was adjourned at 12:10 pm by the Committee Chair.

Teleconference call only due to Covid19

Northern California Power Agency
August 4, 2021 Facilities Committee Meeting
Attendance List

NCPA Facilities Committee Members are requested to sign, but signature by members of the public is voluntary.

MEMBER	NAME
ALAMEDA	✓
BART	
BIGGS	
GRIDLEY	✓
HEALDSBURG	✓
LODI	✓
LOMPOC	✓
PALO ALTO	✓
PLUMAS-SIERRA REC	✓
PORT OF OAKLAND	✓
REDDING	✓
ROSEVILLE	✓
SANTA CLARA	✓
TID	✓
UKIAH	

Northern California Power Agency
August 4, 2021 Facilities Committee Meeting
Attendance List

NCPA Facilities Committee Members, Alternates & Staff are requested to sign, but signature by members of the public is voluntary.

NAME	AFFILIATION
Michelle Schellentrager	Gen Svcs
Tony Zimmer	NCPA
Bob Caracristi	NCPA
Jeremy Lawson	NCPA
Marty Hostler	NCPA

10

Commission Staff Report

COMMISSION MEETING DATE: August 26, 2021

SUBJECT: July 31, 2021 Financial Report (unaudited)

AGENDA CATEGORY: Consent

FROM:	Sondra Ainsworth	**METHOD OF SELECTION:**
	Treasurer-Controller	N/A
Division:	Administrative Services	
Department:	Accounting & Finance	

IMPACTED MEMBERS:

All Members	☒	**City of Lodi**	☐	**City of Shasta Lake**	☐
Alameda Municipal Power	☐	**City of Lompoc**	☐	**City of Ukiah**	☐
San Francisco Bay Area Rapid Transit	☐	**City of Palo Alto**	☐	**Plumas-Sierra REC**	☐
City of Biggs	☐	**City of Redding**	☐	**Port of Oakland**	☐
City of Gridley	☐	**City of Roseville**	☐	**Truckee Donner PUD**	☐
City of Healdsburg	☐	**City of Santa Clara**	☐	**Other**	☐

If other, please specify _____

_____

SR: 207:21

RECOMMENDATION:

Recommending the Northern California Power Agency (NCPA) Commission approve the Financial Report for month ending July 31, 2021.

NOTICE:

The disbursements of the Northern California Power Agency (NCPA) for the month reported herein, will be approved at the August 26, 2021 meeting of the NCPA Commission. The following page is a summary of those disbursements.

Prior to the Chairman's call to order, the Assistant Secretary to the Commission will, upon request, make available for review the detailed listing of those disbursements.

The report of budget vs. actual costs and the unaudited July 31, 2021 financial reports are also included.

FISCAL IMPACT:

This report has no direct budget impact to the Agency.

ENVIRONMENTAL ANALYSIS:

This activity would not result in a direct or reasonably foreseeable indirect change in the physical environment and is therefore, not a "project" for purposes of Section 21065 the California Environmental Quality Act. No environmental review is necessary.

Respectfully submitted,

Monty Hand for

RANDY S. HOWARD
General Manager

Attachments:
- July 31, 2021 Financial Report

SR: 207:21

NORTHERN CALIFORNIA POWER AGENCY
and ASSOCIATED POWER CORPORATIONS

Schedule of Disbursements
(Unaudited)

For the Month of July 2021

Operations:		
Geothermal	**$**	**1,455,022**
Hydroelectric		**4,642,695**
CT#1 Combustion Turbines		**192,360**
CT#2 STIG		**720,038**
Lodi Energy Center		**9,019,429**
NCPA Operating		**42,638,731**
Total	**$**	**58,668,275**

NORTHERN CALIFORNIA POWER AGENCY
REPORT OF BUDGET VS. ACTUAL COST
FOR THE PERIOD ENDED JULY 31, 2021

PERCENT OF YEAR ELAPSED
8%

	This Month	Actual Year To-Date	FY 2022 Budget	% Used	
GENERATION RESOURCES					
NCPA Plants					
Hydroelectric					
Other Plant Cost	$ 1,976,070	$ 1,976,070	$ 20,659,536	10%	
Debt Service (Net)	2,785,136	2,785,136	33,421,637	8%	
Annual Budget Cost	4,761,206	4,761,206	54,081,173	9%	
Geothermal					
Other Plant Cost	2,884,623	2,884,623	35,708,919	8%	
Debt Service (Net)	412,788	412,788	4,953,453	8%	
Annual Budget Cost	3,297,411	3,297,411	40,662,372	8%	
Combustion Turbine No. 1	632,900	632,900	7,054,684	9%	
Combustion Turbine No. 2 (Stig)					
Fuel and Pipeline Transport Charges	249,390	249,390	1,265,369	20%	(a)
Other Plant Cost	195,433	195,433	2,649,010	7%	
Debt Service (Net)	420,667	420,667	5,048,000	8%	
Annual Budget Cost	865,490	865,490	8,962,379	10%	
Lodi Energy Center					
Fuel	7,297,822	7,297,822	31,029,301	24%	(a)
Other Plant Cost	3,675,233	3,675,233	31,775,721	12%	(a)
Debt Service (Net)	2,197,050	2,197,050	26,008,267	8%	
Annual Budget Cost	13,170,105	13,170,105	88,813,289	15%	
Member Resources - Energy	8,021,075	8,021,075	67,416,504	12%	(b)
Member Resources - Natural Gas	616,776	616,776	2,981,422	21%	(a)
Western Resources	3,026,552	3,026,552	27,302,082	11%	(b)
Market Power Purchases	1,663,383	1,663,383	17,224,803	10%	(b)
Load Aggregation Costs - CAISO	60,941,100	60,941,100	282,244,061	22%	(c)
Net GHG Obligations	-	-	1,276,784	N/A	
	96,995,998	**96,995,998**	**598,019,553**	**16%**	
TRANSMISSION					
Independent System Operator					
Grid Management Charge	664,164	664,164	2,417,506	27%	(d)
Wheeling Access Charge	10,225,619	10,225,619	119,362,830	9%	
Ancillary Services	1,183,063	1,183,063	3,846,319	31%	(e)
Other ISO Charges/(Credits)	17,758,615	17,758,615	946,016	1877%	(d)
	29,831,461	**29,831,461**	**126,572,671**	24%	
MANAGEMENT SERVICES					
Legislative & Regulatory					
Legislative Representation	129,429	129,429	2,101,373	6%	
Regulatory Representation	60,823	60,823	633,940	10%	
Western Representation	39,389	39,389	693,937	6%	
Customer Programs	36,617	36,617	481,257	8%	
Judicial Action	-	-	300,000	0%	
Power Management					
System Control & Load Dispatch	626,895	626,895	7,427,479	8%	
Forecasting, Planning, Prescheduling & Trading	242,966	242,966	2,810,687	9%	
Industry Restructuring & Regulatory Affairs	36,327	36,327	423,181	9%	
Contract Admin, Interconnection Svcs & External Affairs	89,804	89,804	974,600	9%	
Gas Purchase Program	4,912	4,912	80,779	6%	
Market Purchase Project	6,972	6,972	115,897	6%	

Management Services continued on next page

NORTHERN CALIFORNIA POWER AGENCY
REPORT OF BUDGET VS. ACTUAL COST
FOR THE PERIOD ENDED JULY 31, 2021

PERCENT OF YEAR ELAPSED
8%

	This Month	Actual Year To-Date	FY 2022 Budget	% Used	
Energy Risk Management	7,520	7,520	198,417	4%	
Settlements	79,408	79,408	975,283	8%	
Integrated Systems Support	74,533	74,533	307,165	24%	(f)
Participant Pass Through Costs	104,652	104,652	1,717,765	6%	
Support Services	15,976	15,976	-	N/A	
	1,556,223	**1,556,223**	**19,241,760**	**8%**	
TOTAL ANNUAL BUDGET COST	**128,383,682**	**128,383,682**	**743,833,984**	**17%**	
LESS: THIRD PARTY REVENUE					
Plant ISO Energy Sales	24,278,972	24,278,972	101,639,828	24%	(a)
Member Resource ISO Energy Sales	5,075,269	5,075,269	34,352,521	15%	(b)
Member Owned Generation ISO Energy Sales	15,830,945	15,830,945	83,030,430	19%	(b)
Revenue from Customers	33,389,686	33,389,686	-	N/A	(c)(d)(e)
NCPA Contracts ISO Energy Sales	4,095,851	4,095,851	12,614,852	32%	(b)
Western Resource Energy Sales	5,354,183	5,354,183	19,296,646	28%	(b)
Load Aggregation Energy Sales	28,991,305	28,991,305	-	N/A	(c)
Ancillary Services Sales	1,011,261	1,011,261	4,317,168	23%	(g)
Transmission Sales	9,198	9,198	110,376	8%	
Western Credits, Interest and Other Income	5,993,972	5,993,972	41,468,679	14%	(h)
	124,030,642	**124,030,642**	**296,830,500**	**42%**	
NET ANNUAL BUDGET COST TO PARTICIPANTS	**$ 4,353,040**	**$ 4,353,040**	**$ 447,003,484**	**1%**	

(a) Increase due higher energy production and higher market prices related to July heat events.

(b) High heat events in July increased energy demand from other energy resources, driving up market prices and resulting in increased costs and revenues from energy transactions.

(c) Increase due to unbudgeted energy purchases and sales related to CCA's (East Bay Community Energy, San Jose Clean Energy, and Sonoma Clean Power), which is offset by revenue from customers.

(d) Increase due to unbudgeted grid management estimates, neutrality charges estimates and other cost estimates related to CCA's, which is offset by revenue from customers.

(e) Increase due to unbudgeted ancillary services cost estimates related to CCA's, which is offset by revenue from customers, as well as greater than expected spinning, non-spinning, reg up and down obligation settlements for the NCPA pool.

(f) Variance caused by FY22 software maintenance contract costs paid in-full during July. Variance expected to levelize throughout the year.

(g) Increase primarily due to greater than expected spinning and reg up capacity settlements revenue from Hydro plant.

(h) Increase due primarily to higher than anticipated Western O&M revenue credits and member contract sales.

COMBINED STATEMENTS OF NET POSITION

NORTHERN CALIFORNIA POWER AGENCY AND ASSOCIATED POWER CORPORATIONS

UNAUDITED

	July 31, 2021	July 31, 2020
ASSETS	(in thousands)	
CURRENT ASSETS		
Cash and cash equivalents	$ 71,909	$ 25,886
Investments	32,063	45,246
Accounts receivable		
Participants	155	1,481
Other	13,578	10,589
Interest receivable	250	411
Inventory and supplies	5,901	5,924
Prepaid expenses	2,184	1,366
TOTAL CURRENT ASSETS	126,040	90,903
RESTRICTED ASSETS		
Cash and cash equivalents	65,755	62,817
Investments	163,660	144,497
Interest receivable	466	484
TOTAL RESTRICTED ASSETS	229,881	207,798
ELECTRIC PLANT		
Electric plant in service	1,497,335	1,494,177
Less: accumulated depreciation	(1,050,631)	(1,021,402)
TOTAL ELECTRIC PLANT	446,704	472,775
OTHER ASSETS		
Regulatory assets	207,866	224,899
Investment in associated company	265	265
TOTAL ASSETS	1,010,756	996,640
DEFERRED OUTFLOWS OF RESOURCES		
Excess cost on refunding of debt	11,090	21,478
Pension and OPEB deferrals	18,099	16,936
Asset retirement obligations	61,872	61,985
TOTAL DEFERRED OUTFLOWS OF RESOURCES	91,061	100,399
TOTAL ASSETS AND DEFERRED OUTFLOWS OF RESOURCES	$ 1,101,817	$ 1,097,039

COMBINED STATEMENTS OF NET POSITION

NORTHERN CALIFORNIA POWER AGENCY
AND ASSOCIATED POWER CORPORATIONS

UNAUDITED

	July 31,	
	2021	2020
LIABILITIES	(in thousands)	
CURRENT LIABILITIES		
Accounts payable and accrued expenses	$ 74,939	$ 33,587
Member advances	993	993
Operating reserves	23,727	19,809
Current portion of long-term debt	44,575	42,240
Accrued interest payable	3,978	3,851
TOTAL CURRENT LIABILITIES	148,212	100,480
NON-CURRENT LIABILITIES		
Net pension and OPEB liabilities	62,959	63,003
Operating reserves and other deposits	143,882	133,932
Interest rate swap liability	16,045	18,968
Asset retirement obligations	68,264	66,754
Long-term debt, net	526,601	573,908
TOTAL NON-CURRENT LIABILITIES	817,751	856,565
TOTAL LIABILITIES	965,963	957,045
DEFERRED INFLOWS OF RESOURCES		
Regulatory credits	91,205	88,300
Pension and OPEB deferrals	2,187	4,737
TOTAL DEFERRED INFLOWS OF RESOURCES	93,392	93,037
NET POSITION		
Net investment in capital assets	(4,634)	(12,181)
Restricted for debt service	20,163	37,241
Unrestricted	26,933	21,897
TOTAL NET POSITION	42,462	46,957
TOTAL LIABILITIES, DEFERRED INFLOWS OF RESOURCES AND NET POSITION	$ 1,101,817	$ 1,097,039

COMBINED STATEMENTS OF REVENUES, EXPENSES AND CHANGES IN NET POSITION

NORTHERN CALIFORNIA POWER AGENCY AND ASSOCIATED POWER CORPORATIONS

UNAUDITED

	For the One Month Ended July 31,	
	2021	2020
	(in thousands)	
OPERATING REVENUES		
Participants	$ 49,106	$ 33,659
Other Third-Party	38,170	5,864
TOTAL OPERATING REVENUES	87,276	39,523
OPERATING EXPENSES		
Purchased power	18,280	10,158
Operations	13,401	4,898
Transmission	30,089	7,748
Depreciation	2,555	2,534
Maintenance	2,174	1,057
Administrative and general	893	621
TOTAL OPERATING EXPENSES	67,392	27,016
NET OPERATING REVENUES	19,884	12,507
NON OPERATING (EXPENSES) REVENUES		
Interest expense	(2,626)	(2,742)
Interest income	(892)	(3,757)
Other	473	187
TOTAL NON OPERATING EXPENSES	(3,045)	(6,312)
FUTURE RECOVERABLE AMOUNTS	(2,132)	(989)
REFUNDS TO PARTICIPANTS	127	1,479
INCREASE (DECREASE) IN NET POSITION	14,834	6,685
NET POSITION, Beginning of year	27,628	40,272
NET POSITION, Period ended	$ 42,462	$ 46,957

OTHER FINANCIAL INFORMATION

COMBINING STATEMENT OF NET POSITION

NORTHERN CALIFORNIA POWER AGENCY AND ASSOCIATED POWER CORPORATIONS
(000's omitted)

July 31, 2021

	GENERATING & TRANSMISSION RESOURCES									
ASSETS	Geothermal	Hydroelectric	Multiple Capital Facilities	CT No. One	Lodi Energy Center	Transmission No. One	Purchased Power & Transmission	Associated Member Services	Other Agency	Combined
CURRENT ASSETS										
Cash and cash equivalents	$ 1	$ -	$ 1	$ 1	$ 141	$ -	$ -	$ 398	$ 71,367	$ 71,909
Investments	-	-	-	-	-	-	-	-	32,063	32,063
Accounts receivable										
Participants	-	-	-	-	-	-	-	32	123	155
Other	-	-	-	-	-	-	5,980	-	7,598	13,578
Interest receivable	-	-	-	-	-	-	78	-	172	250
Inventory and supplies	1,514	1,572	332	284	2,199	-	-	-	-	5,901
Prepaid expenses	496	704	57	83	518	-	-	24	302	2,184
Due from Agency and other programs*	13,245	1,332	4,053	7,518	31,475	-	30,160	7,192	(94,975)	-
TOTAL CURRENT ASSETS	15,256	3,608	4,443	7,886	34,333	-	36,218	7,646	16,650	126,040
RESTRICTED ASSETS										
Cash and cash equivalents	2,535	10,104	4,529	-	6,176	-	19,528	-	22,883	65,755
Investments	26,652	30,002	28	-	27,466	-	18,830	-	60,682	163,660
Interest receivable	86	67	-	-	59	-	-	-	254	466
TOTAL RESTRICTED ASSETS	29,273	40,173	4,557	-	33,701	-	38,358	-	83,819	229,881
ELECTRIC PLANT										
Electric plant in service	574,949	395,293	64,865	37,224	410,208	7,736	-	894	6,166	1,497,335
Less: accumulated depreciation	(546,401)	(291,393)	(55,165)	(35,092)	(110,197)	(7,736)	-	(639)	(4,008)	(1,050,631)
TOTAL ELECTRIC PLANT	28,548	103,900	9,700	2,132	300,011	-	-	255	2,158	446,704
OTHER ASSETS										
Regulatory assets	89	123,237	4,578	-	28,656	-	-	-	51,306	207,866
Investment in associated company	-	-	-	-	-	-	-	-	265	265
TOTAL ASSETS	73,166	270,918	23,278	10,018	396,701	-	74,576	7,901	154,198	1,010,756
DEFERRED OUTFLOWS OF RESOURCES										
Excess cost on refunding of debt	801	9,131	-	-	1,158	-	-	-	-	11,090
Pension and OPEB deferrals	-	-	-	-	-	-	-	-	18,099	18,099
Asset retirement obligations	61,520	-	165	-	187	-	-	-	-	61,872
TOTAL DEFERRED OUTFLOWS OF RESOURCES	62,321	9,131	165	-	1,345	-	-	-	18,099	91,061
TOTAL ASSETS AND DEFERRED OUTFLOWS OF RESOURCES	$ 135,487	$ 280,049	$ 23,443	$ 10,018	$ 398,046	$ -	$ 74,576	$ 7,901	$ 172,297	$ 1,101,817

* Eliminated in Combination

OTHER FINANCIAL INFORMATION

COMBINING STATEMENT OF NET POSITION

NORTHERN CALIFORNIA POWER AGENCY AND ASSOCIATED POWER CORPORATIONS
(000's omitted)

July 31, 2021

	GENERATING & TRANSMISSION RESOURCES									
	Geothermal	Hydroelectric	Multiple Capital Facilities	CT No. One	Lodi Energy Center	Transmission	Purchased Power & Transmission	Associated Member Services	Other Agency	Combined
LIABILITIES										
CURRENT LIABILITIES										
Accounts payable and accrued expenses	$ 475	$ 645	$ -	$ 1	$ 7,526	$ -	$ 50,355	$ -	$ 15,937	$ 74,939
Member advances	791	-	-	-	-	-	-	202	-	993
Operating reserves	2,405	250	617	4,305	16,150	-	-	-	-	23,727
Current portion of long-term debt	4,760	22,855	4,080	-	12,880	-	-	-	-	44,575
Accrued interest payable	16	1,371	398	-	2,193	-	-	-	-	3,978
TOTAL CURRENT LIABILITIES	8,447	25,121	5,095	4,306	38,749	-	50,355	202	15,937	148,212
NON-CURRENT LIABILITIES										
Net pension and OPEB liability	-	-	-	-	-	-	-	-	62,959	62,959
Operating reserves and other deposits	1,500	19,186	-	-	202	-	37,437	1,740	83,817	143,882
Interest rate swap liability	-	16,045	-	-	-	-	-	-	-	16,045
Asset retirement obligations	67,911	-	165	-	188	-	-	-	-	68,264
Long-term debt, net	6,785	210,970	15,191	-	293,655	-	-	-	-	526,601
TOTAL NON-CURRENT LIABILITIES	76,196	246,201	15,356	-	294,045	-	37,437	1,740	146,776	817,751
TOTAL LIABILITIES	84,643	271,322	20,451	4,306	332,794	-	87,792	1,942	162,713	965,963
DEFERRED INFLOWS OF RESOURCES										
Regulatory credits	41,491	3,675	1,127	2,341	39,652	-	-	279	2,640	91,205
Pension and OPEB deferrals	-	-	-	-	-	-	-	-	2,187	2,187
TOTAL DEFERRED INFLOWS OF RESOURCES	41,491	3,675	1,127	2,341	39,652	-	-	279	4,827	93,392
NET POSITION										
Net investment in capital assets	5,592	(5,377)	(5,703)	-	854	-	-	-	-	(4,634)
Restricted for debt service	403	8,529	4,131	-	7,100	-	-	-	-	20,163
Unrestricted	3,358	1,900	3,437	3,371	17,646	-	(13,216)	5,680	4,757	26,933
TOTAL NET POSITION	9,353	5,052	1,865	3,371	25,600	-	(13,216)	5,680	4,757	42,462
TOTAL LIABILITIES, DEFERRED INFLOWS OF RESOURCES AND NET POSITION	$ 135,487	$ 280,049	$ 23,443	$ 10,018	$ 398,046	$ -	$ 74,576	$ 7,901	$ 172,297	$ 1,101,817

OTHER FINANCIAL INFORMATION

COMBINING STATEMENT OF REVENUES, EXPENSES AND CHANGES IN NET POSITION

NORTHERN CALIFORNIA POWER AGENCY
AND ASSOCIATED POWER CORPORATIONS
(000's omitted)

For the One Month Ended July 31, 2021

	GENERATING & TRANSMISSION RESOURCES									
	Geothermal	Hydroelectric	Multiple Capital Facilities	CT No. One	Lodi Energy Center	Transmission	Purchased Power & Transmission	Associated Member Services	Other Agency	Combined
OPERATING REVENUES										
Participants	$ 1,704	$ 3,360	$ 1,129	$ 1,373	$ 8,431	$ -	$ 31,554	$ 1,547	$ 8	$ 49,106
Other Third-Party	4,487	3,296	996	1,034	14,944	-	13,450	(37)	-	38,170
TOTAL OPERATING REVENUES	6,191	6,656	2,125	2,407	23,375	-	45,004	1,510	8	87,276
OPERATING EXPENSES										
Purchased power	147	468	32	211	415	-	17,007	-	-	18,280
Operations	1,384	331	297	174	9,656	-	555	1,004	-	13,401
Transmission	24	39	2	1	82	-	29,941	-	-	30,089
Depreciation	313	834	186	25	1,179	-	-	4	14	2,555
Maintenance	1,046	428	70	146	477	-	-	7	-	2,174
Administrative and general	521	689	40	94	430	-	-	529	(1,410)	893
Intercompany (sales) purchases, net*	(58)	23	4	6	25	-	-	-	-	-
TOTAL OPERATING EXPENSES	3,377	2,812	631	657	12,264	-	47,503	1,544	(1,396)	67,392
NET OPERATING REVENUES	2,814	3,844	1,494	1,750	11,111	-	(2,499)	(34)	1,404	19,884
NON OPERATING (EXPENSES) REVENUES										
Interest expense	(38)	(1,463)	(6)	-	(1,119)	-	-	-	-	(2,626)
Interest income	(59)	(43)	2	3	11	-	2	3	(811)	(892)
Other	-	-	125	-	289	-	(61)	-	120	473
TOTAL NON OPERATING (EXPENSES) REVENUES	(97)	(1,506)	121	3	(819)	-	(59)	3	(691)	(3,045)
FUTURE RECOVERABLE AMOUNTS	(200)	(553)	(226)	-	(1,153)	-	-	-	-	(2,132)
REFUNDS TO PARTICIPANTS	378	(231)	13	(141)	-	-	(116)	(94)	318	127
INCREASE (DECREASE) IN NET POSITION	2,895	1,554	1,402	1,612	9,139	-	(2,674)	(125)	1,031	14,834
NET POSITION, Beginning of year	6,458	3,498	463	1,759	16,461	-	(10,542)	5,805	3,726	27,628
NET POSITION, Period ended	$ 9,353	$ 5,052	$ 1,865	$ 3,371	$ 25,600	$ -	$ (13,216)	$ 5,680	$ 4,757	$ 42,462

* Eliminated in Combination

NORTHERN CALIFORNIA POWER AGENCY & ASSOCIATED POWER CORPORATIONS
AGED ACCOUNTS RECEIVABLE
July 31, 2021

Status	Participant / Customer	Description	Amount	
CURRENT			$ 13,239,468	
PAST DUE:				
1 - 30	Bridge to Renewables, Benefit LLC	Energy sale	200,000	*
31 - 60				
61 - 90				
91 - 120				
Over 120 Days	Calpine Geysers	Effluent Adj (Mar'18 - Dec'19)	292,665	
	PARTICIPANT and OTHER RECEIVABLES (net)		$ 13,732,133	

** Denotes items paid/applied after July 31, 2021.*

NOTE: All amounts invoiced or credited to members and others are project/program specific.
NCPA does not apply any credits issued to outstanding invoices unless directed.

NORTHERN CALIFORNIA POWER AGENCY
and ASSOCIATED POWER CORPORATIONS

Schedule of Disbursements
(Unaudited)

For the Month of July 2021

Operations:		
Geothermal	**$**	**1,455,022**
Hydroelectric		**4,642,695**
CT#1 Combustion Turbines		**192,360**
CT#2 STIG		**720,038**
Lodi Energy Center		**9,019,429**
NCPA Operating		**42,638,731**
Total	**$**	**58,668,275**

11

A PUBLIC AGENCY
NCPA
NORTHERN CALIFORNIA POWER AGENCY

Commission Staff Report

COMMISSION MEETING DATE: August 26, 2021

SUBJECT: Treasurer's Report for Month Ended July 31, 2021

AGENDA CATEGORY: Consent

FROM:	Sondra Ainsworth	**METHOD OF SELECTION:**
	Treasurer-Controller	N/A
Division:	Administrative Services	
Department:	Accounting & Finance	

IMPACTED MEMBERS:

All Members	☒	**City of Lodi**	☐	**City of Shasta Lake**	☐
Alameda Municipal Power	☐	**City of Lompoc**	☐	**City of Ukiah**	☐
San Francisco Bay Area Rapid Transit	☐	**City of Palo Alto**	☐	**Plumas-Sierra REC**	☐
City of Biggs	☐	**City of Redding**	☐	**Port of Oakland**	☐
City of Gridley	☐	**City of Roseville**	☐	**Truckee Donner PUD**	☐
City of Healdsburg	☐	**City of Santa Clara**	☐	**Other**	☐

If other, please specify

RECOMMENDATION:

Recommending the Northern California Power Agency (NCPA) Commission approve the Treasurer's Report for July 31, 2021.

BACKGROUND:

In compliance with Northern California Power Agency (NCPA) policy and State of California Government Code Sections 53601 and 53646(b), the following monthly report is submitted for your information and acceptance.

Cash – At month end cash totaled $8,890,155 of which approximately $1,675,051 was applicable to Special and Reserve Fund Deposits, $3,945 to Debt Service and $7,211,159 to Operations and other.

The cash balance held at U.S. Bank includes outstanding checks that have not yet cleared. This cash balance is invested nightly in a fully collateralized (U.S. Government Securities) repurchase agreement.

Investments – The carrying value of NCPA's investment portfolio totaled $324,428,994 at month end. The current market value of the portfolio totaled $326,079,082.

The overall portfolio had a combined weighted average interest rate of 0.869% with a bond equivalent yield (yield to maturity) of 0.881%. Investments with a maturity greater than one year totaled $141,493,000. July maturities totaled $31 million and monthly receipts totaled $61 million. During the month $80 million was invested.

Funds not required to meet annual cash flow are reinvested and separately reported as they occur.

Interest Rates – During the month, rates on 90-day T-Bills remained unchanged at 0.05% and rates on one-year T-Bills decreased 2 basis points from 0.09% to 0.07%.

To the best of my knowledge and belief, all securities held by NCPA as of July 31, 2021 are in compliance with NCPA's investment policy. There are adequate cash flow and investment maturities to meet next month's cash requirements.

FISCAL IMPACT:

This report has no direct budget impact to NCPA.

ENVIRONMENTAL ANALYSIS:

This activity would not result in a direct or reasonably foreseeable indirect change in the physical environment and is therefore not a "project" for purposes of Section 21065 the California Environmental Quality Act. No environmental review is necessary.

Respectfully submitted,

Martin Hamel for

RANDY S. HOWARD
General Manager

Attachment: Treasurer's Report July 31, 2021

SR: 208:21

NORTHERN CALIFORNIA POWER AGENCY

TREASURER'S REPORT

JULY 31, 2021

TABLE OF CONTENTS

	PAGE
CASH & INVESTMENT BALANCE	1
CASH ACTIVITY SUMMARY	2
INVESTMENT ACTIVITY SUMMARY	3
INTEREST RATE/YIELD ANALYSIS	4
INVESTMENT MATURITIES ANALYSIS	5
DETAIL REPORT OF INVESTMENTS	APPENDIX

Northern California Power Agency
Treasurer's Report
Cash & Investment Balance
July 31, 2021

	CASH	INVESTMENTS	TOTAL	PERCENT
NCPA FUNDS				
Operating	$ 2,714,360	$ 135,116,896	$ 137,831,256	41.35%
Special Deposits	4,495,419	-	4,495,419	1.35%
Construction	1,380	5,146,743	5,148,123	1.54%
Debt Service	3,945	24,039,283	24,043,228	7.21%
Special & Reserve	1,675,051	160,126,072	161,801,123	48.54%
	$ 8,890,155	$ 324,428,994	$ 333,319,149	100.00%

Portfolio Investments at Market Value	$ 326,079,082

NOTE A - Investment amounts shown at book carrying value.

Northern California Power Agency
Treasurer's Report
Cash Activity Summary
July 31, 2021

	RECEIPTS			EXPENDITURES			CASH
	OPS/CONSTR	INTEREST (NOTE B)	INVESTMENTS (NOTE A)	OPS/CONSTR	INVESTMENTS (NOTE B)	INTER-COMPANY/ FUND TRANSFERS	INCREASE / (DECREASE)
NCPA FUNDS							
Operating	$ 86,164,681	$ 108,910	$ 11,029,954	$ (25,143,607)	$ (42,717,025)	$ (29,147,973)	$ 294,940
Special Deposits	4,886,694	-	-	(27,936,494)	-	23,045,319	(4,481)
Construction	-	-	-	-	(5,146,704)	-	(5,146,704)
Debt Service	(29,926,848)	24	9,296,529	-	(22,792,665)	5,568,189	(37,854,771)
Special & Reserve	-	212,980	10,346,724	-	(9,427,483)	534,465	1,666,686
	$ 61,124,527	$ 321,914	$ 30,673,207	$ (53,080,101)	$ (80,083,877)	$ -	$ (41,044,330)

NOTE A -Investment amounts shown at book carrying value.

NOTE B -Net of accrued interest purchased on investments.

Northern California Power Agency
Treasurer's Report
Investment Activity Summary
July 31, 2021

	PURCHASED	SOLD OR MATURED	(NON-CASH) DISC/(PREM) AMORT	(NON-CASH) GAIN/(LOSS) ON SALE	INVESTMENTS TRANSFERS	INVESTMENTS INCREASE / (DECREASE)
NCPA FUNDS						
Operating	$ 42,717,025	$ (11,029,954)	$ 5,961	$ -	$ -	$ 31,693,032
Special Deposits	-	-	-	-	-	-
Construction	5,146,704	-	39	-	-	5,146,743
Debt Service	22,792,665	(9,296,529)	208	-	-	13,496,344
Special & Reserve	9,427,483	(10,346,724)	(22,503)	401	-	(941,343)
	$ 80,083,877	$ (30,673,207)	$ (16,295)	$ 401	$ -	$ 49,394,776

Less Non- Cash Activity	
Disc/(Prem) Amortization & Gain/(Loss) on Sale	15,894
Net Change in Investment --Before Non-Cash Activity	$ 49,410,670

NOTE A -Investment amounts shown at book carrying value.

Northern California Power Agency
Interest Rate/Yield Analysis
July 31, 2021

	WEIGHTED AVERAGE INTEREST RATE	BOND EQUIVALENT YIELD
OVERALL COMBINED	**0.869%**	**0.881%**
OPERATING FUNDS:	**0.954%**	**0.895%**
PROJECTS:		
Geothermal	1.401%	1.307%
Capital Facilities	0.005%	0.005%
Hydroelectric	0.839%	0.846%
Lodi Energy Center	0.737%	0.598%

KEY INTEREST RATES	CURRENT	PRIOR YEAR
Fed Fds (Overnight)	0.10%	0.09%
T-Bills (90da.)	0.05%	0.10%
Agency Disc (90da.)	0.09%	0.16%
T-Bills (1yr.)	0.07%	0.13%
Agency Disc (1yr.)	0.10%	0.18%
T-Notes (3yr.)	0.37%	0.15%

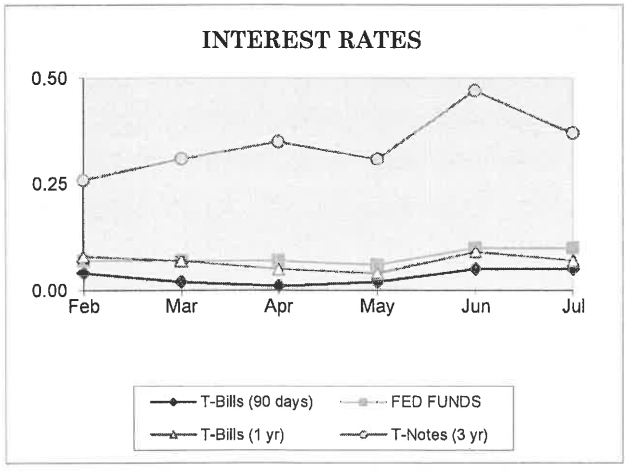

Northern California Power Agency
Total Portfolio
Investment Maturities Analysis
July 31, 2021

Type	0-7 Days	8-90 Days	91-180 Days	181-270 Days	271-365 Days	1-5 Years	6-10 Years	Total	Percent
US Government Agencies	$ -	$ 839	$ 3,928	$ -	$ 7,675	$ 53,620	$ 4,572	$ 70,634	21.64%
Corporate Bonds (MTN)	-	1,495	1,250	5,450	8,105	54,888	-	71,188	21.81%
Municipal Bonds	-	-	2,055	-	1,000	26,578	585	30,218	9.26%
US Bank Trust Money Market	8,044	-	-	-	-	-	-	8,044	2.46%
Commercial Paper	11,825	-	-	-	-	-	-	11,825	3.63%
Investment Trusts (LAIF)	66,380	-	-	-	-	-	-	66,380	20.33%
Investment Trusts (CAMP)	32,001	-	-	-	-	-	-	32,001	9.81%
U.S.Treasury Market Acct. *	8,799	-	-	-	-	-	-	8,799	2.70%
U.S.Treasury Bill/Note	-	5,147	19,510	688	509	-	-	25,854	7.92%
Certificates of Deposit	-	260	-	-	-	1,250	-	1,510	0.46%
Total Dollars	$ 127,049	$7,741	$26,743	$6,138	$ 17,289	$136,336	$5,157	$ 326,453	100.00%
Total Percents	38.91%	2.37%	8.19%	1.88%	5.30%	41.76%	1.58%	100.00%	

Investments are shown at Face Value, in thousands.

* The cash balance held at US Bank includes outstanding checks that have not yet cleared. This cash balance is invested nightly in a fully collateralized (U.S. Government Securities) repurchase agreement. Cash held by Union Bank of California is invested nightly in fully collateralized U.S. Treasury Securities.

NORTHERN CALIFORNIA POWER AGENCY

Detail Report Of Investments

APPENDIX

Note: **This appendix has been prepared to comply with Government Code section 53646.**

Northern California Power Agency

Treasurer's Report

07/31/2021

Operating

Issuer	Trustee / Custodian	Stated Value	Interest Rate	Purchase Date	Purchased Price	Maturity Date	Days to Maturity	Bond* Equiv Yield	Market Value	CUSIP	Investment #	Carrying Value
US Bank, N.A.	USB	0	0.050		0		1	0.050	0	SYS70101	70101	0
Local Agency Investm	LAIF	22,052,604	0.322		22,052,604		1	0.322	22,052,604	SYS70000	70000	22,052,604
Union Bank of Califo	UBOC	2,754,815	0.002		2,754,815		1	0.002	2,754,815	SYS70014	70014	2,754,815
US Bank	USB	2,714,360	0.001		2,714,360		1	0.001	2,714,360	SYS70050	70050	2,714,360
US Bank	USB	11,825,396	0.010	08/24/2017	11,825,396		1	0.010	11,825,396	SYS70056	70056	11,825,396
California Asset Mgm	CMP	32,000,275	0.050	10/19/2018	32,000,275		1	0.050	32,000,275	SYS70070	70070	32,000,275
American Honda Finan	UBOC	1,000,000	1.700	09/20/2018	959,220	09/09/2021	39	3.149	1,001,540	02665WBG5	26669	998,550
US Bank	USB	10,000	0.050	07/07/2021	10,000	10/07/2021	67	0.050	10,000	SYS3026	30326	10,000
Procter & Gamble	UBOC	1,000,000	2.300	09/20/2018	975,770	02/06/2022	189	3.060	1,011,080	742718DY2	26673	996,314
Johnson & Johnson	UBOC	1,000,000	2.250	09/20/2018	976,140	03/03/2022	214	2.982	1,010,360	478160CD4	26671	995,931
TD Ameritrade	UBOC	500,000	2.950	05/15/2018	493,385	04/01/2022	243	3.315	506,690	87236YAE8	26601	498,863
PepsiCo Inc.	UBOC	500,000	2.250	03/21/2018	487,005	05/02/2022	274	2.924	506,905	713448DT2	26557	497,622
Apple Inc.	UBOC	1,123,337	2.300	02/01/2018	1,121,966	05/11/2022	283	2.329	1,138,603	037833CQ1	26525	1,123,088
American Honda Finan	UBOC	500,000	2.600	06/12/2018	488,550	11/16/2022	472	3.157	515,045	02665WCA7	26614	496,660
Chevron Corp.	UBOC	500,000	2.355	03/21/2018	485,760	12/05/2022	491	3.008	511,820	166764AB6	26555	495,931
Visa Inc.	UBOC	400,000	2.800	08/03/2018	394,552	12/14/2022	500	3.135	412,692	92826CAC6	26647	398,290
Toyota Motor Credit	UBOC	1,000,000	2.700	08/03/2018	974,760	01/11/2023	528	3.315	1,034,820	89236TEL5	26645	991,787
Simon Property Group	UBOC	500,000	2.750	05/15/2018	484,585	02/01/2023	549	3.464	514,710	828807CN5	26603	495,092
Exxon Mobil Corporat	UBOC	1,000,000	2.726	08/03/2018	985,450	03/01/2023	577	3.068	1,034,610	30231GAR3	26648	994,968
John Deere Capital C	UBOC	500,000	2.800	06/12/2018	489,875	03/06/2023	582	3.264	520,615	24422ETG4	26613	496,583
Berkshire Hathaway I	UBOC	500,000	2.750	03/21/2018	492,280	03/15/2023	591	3.086	518,190	084670BR8	26554	497,487
United Parcel Servic	UBOC	500,000	2.500	05/15/2018	483,225	04/01/2023	608	3.248	517,325	911312BK1	26600	494,268
United Parcel Servic	UBOC	500,000	2.500	09/21/2018	483,120	04/01/2023	608	3.308	517,325	911312BK1	26677	493,787
Walmart, Inc.	UBOC	500,000	2.550	07/31/2019	507,870	04/11/2023	618	2.104	517,340	931142DH3	26848	503,610
Bank of NY Mellon Co	UBOC	500,000	3.500	05/15/2018	501,265	04/28/2023	635	3.443	528,050	06406RAG2	26602	500,445
Hershey Company	UBOC	500,000	3.375	06/12/2018	503,125	05/15/2023	652	3.236	526,095	427866AZ1	26615	501,135
Commonwealth of Mass	UBOC	500,000	0.508	07/09/2020	500,000	07/01/2023	699	0.507	502,510	57582RF84	27029	500,000
US Bank	UBOC	1,000,000	3.400	08/03/2018	1,000,000	07/24/2023	722	3.399	1,059,160	90331HNV1	26646	1,000,000
Microsoft Corp.	UBOC	1,000,000	2.000	09/20/2018	947,350	08/08/2023	737	3.172	1,032,610	594918BQ6	26672	978,227
JP Morgan	UBOC	500,000	3.875	02/15/2019	514,550	02/01/2024	914	3.561	541,700	46625HJT8	26760	507,332
East Side Union High	UBOC	500,000	0.820	10/29/2020	500,000	08/01/2024	1,096	0.878	502,600	275282PR6	27105	500,000
Federal Farm Credit	UBOC	2,300,000	1.890	09/27/2019	2,300,000	09/27/2024	1,153	1.890	2,305,842	3133EKU20	26888	2,300,000
Toyota Motor Credit	UBOC	1,000,000	2.150	09/27/2019	1,000,000	09/27/2024	1,153	2.323	1,001,670	89236TGH2	26887	1,000,000
CA St Dept of Wtr Re	UBOC	600,000	0.560	08/06/2020	600,000	12/01/2024	1,218	0.584	600,690	13067WRB0	27055	600,000
US Bank, N.A.	UBOC	500,000	2.800	02/07/2020	522,560	01/27/2025	1,275	1.846	536,630	90331HMS9	26947	515,830
Federal National Mtg	UBOC	1,000,000	0.570	07/30/2020	1,000,000	01/29/2025	1,277	0.570	999,530	3136G4E74	27043	1,000,000
Federal National Mtg	UBOC	1,000,000	0.710	06/04/2020	1,000,000	06/04/2025	1,403	0.710	999,820	3136G4WA7	27009	1,000,000
State of Louisiana	UBOC	260,000	0.697	02/25/2021	260,000	06/15/2025	1,414	0.730	260,166	546486BV2	27178	260,000
Federal Home Loan Mt	UBOC	500,000	0.700	06/25/2020	500,000	06/25/2025	1,424	0.700	501,430	3134GVR26	27015	500,000
Nashville Met Gov	UBOC	500,000	0.610	02/18/2021	500,000	07/01/2025	1,430	0.629	499,665	592112UB0	27173	500,000

Northern California Power Agency
Treasurer's Report
07/31/2021

Operating

Issuer	Trustee / Custodian	Stated Value	Interest Rate	Purchase Date	Purchased Price	Maturity Date	Days to Maturity	Bond* Equiv Yield	Market Value	CUSIP	Investment #	Carrying Value
City of Phoenix AZ	UBOC	500,000	0.959	08/25/2020	500,000	07/01/2025	1,430	0.990	504,455	71884AF20	27058	500,000
Wisconsin Dept Trans	UBOC	500,000	0.774	07/30/2020	500,000	07/01/2025	1,430	0.787	501,475	977123X78	27041	500,000
East Side Union High	UBOC	1,000,000	0.940	10/29/2020	1,000,000	08/01/2025	1,461	0.992	1,003,840	275282PS4	27106	1,000,000
Federal Farm Credit	UBOC	500,000	0.680	08/04/2020	500,000	08/04/2025	1,464	0.680	499,345	3133EL2U7	27052	500,000
Federal National Mtg	UBOC	1,000,000	0.650	12/21/2020	1,005,200	11/18/2025	1,570	0.542	1,000,830	3135GA4P3	27137	1,004,553
JP Morgan	UBOC	250,000	0.825	12/22/2020	250,000	12/22/2025	1,604	0.825	240,685	48128GY53	27138	250,000
Toyota Motor Credit	UBOC	500,000	0.700	01/21/2021	500,000	01/20/2026	1,633	0.699	493,460	89236THY4	27149	500,000
Federal Home Loan Ba	UBOC	375,000	0.500	02/25/2021	375,000	02/25/2026	1,669	0.500	373,294	3130AKXX9	27179	375,000
Federal Farm Credit	UBOC	500,000	0.840	03/02/2021	500,000	03/02/2026	1,674	0.840	499,345	3133EMSK9	27196	500,000
Federal Farm Credit	UBOC	1,100,000	0.800	03/09/2021	1,100,000	03/09/2026	1,681	0.800	1,103,971	3133EMSU7	27200	1,100,000
United Health Group	UBOC	500,000	1.150	06/28/2021	501,660	05/15/2026	1,748	1.079	504,425	91324PEC2	27230	501,629
Bank of America Corp	UBOC	1,700,000	1.250	05/28/2021	1,700,000	05/28/2026	1,761	1.250	1,700,918	06048WM31	27225	1,700,000
	Fund Total and Average	**$ 103,465,787**	0.643		**$ 103,221,673**		**303**	**0.711**	**$ 103,971,331**			**$ 103,420,432**

MPP GHG Auction Acct

Local Agency Investm		397,850	0.322		397,850		1	0.322	397,850	SYS70045	70045	397,850
	Fund Total and Average	**$ 397,850**	0.322		**$ 397,850**		**1**	**0.322**	**$ 397,850**			**$ 397,850**

SCPA Balancing Account

Local Agency Investm	LAIF	14,476,467	0.322		14,476,467		1	0.322	14,476,467	SYS70022	70022	14,476,467
Union Bank of Califo	UBOC	564,806	0.002		564,806		1	0.002	564,806	SYS70023	70023	564,806
Microsoft Corp.	UBOC	500,000	2.375	04/04/2018	492,295	02/12/2022	195	2.798	505,005	594918BA1	26574	498,940
TD Ameritrade	UBOC	500,000	2.950	04/03/2018	497,200	04/01/2022	243	3.100	506,690	87236YAE8	26571	499,533
Home Depot Inc.	UBOC	500,000	2.625	04/04/2018	494,290	06/01/2022	304	2.918	509,150	437076BG6	26572	498,856
Public Storage	UBOC	500,000	2.370	04/04/2018	483,705	09/15/2022	410	3.161	511,140	74460DAB5	26573	495,888
Visa Inc.	UBOC	250,000	2.800	07/24/2018	246,975	12/14/2022	500	3.096	257,933	92826CAC6	26632	249,056
Intel Corp	UBOC	500,000	2.700	06/22/2018	492,300	12/15/2022	501	3.070	516,845	458140AM2	26625	497,642
Toyota Motor Credit	UBOC	550,000	2.625	05/09/2018	536,294	01/10/2023	527	3.203	568,068	89233P7F7	26598	545,768
Cisco Systems Inc.	UBOC	500,000	2.600	06/22/2018	487,655	02/28/2023	576	3.170	518,910	17275RBE1	26624	495,848
Berkshire Hathaway I	UBOC	500,000	2.750	05/09/2018	490,280	03/15/2023	591	3.185	518,190	084670BR8	26596	496,749
United Parcel Servic	UBOC	500,000	2.500	06/22/2018	484,780	04/01/2023	608	3.191	517,325	911312BK1	26627	494,688
Nike Inc	UBOC	500,000	2.250	05/09/2018	480,350	05/01/2023	638	3.108	515,030	654106AC7	26597	493,092
Simon Property Group	UBOC	500,000	2.750	07/24/2018	484,725	06/01/2023	669	3.438	518,735	828807DD6	26631	494,229
Pfizer Inc	UBOC	500,000	3.000	06/22/2018	496,550	06/15/2023	683	3.150	525,255	717081DH3	26626	498,703
Memphis Center City	UBOC	500,000	2.948	11/23/2020	550,395	04/01/2025	1,339	0.600	542,370	586145F74	27113	542,424
State of Wisconsin	UBOC	400,000	0.650	03/17/2021	400,000	05/01/2025	1,369	0.649	400,764	97705MUK9	27202	400,000
Arizona Public Servi	UBOC	239,000	3.150	09/25/2020	263,631	05/15/2025	1,383	0.877	258,189	040555CS1	27073	259,118
California St Hlth F	UBOC	500,000	0.952	11/04/2020	500,000	06/01/2025	1,400	0.952	501,670	13032UXM5	27110	500,000
City of Baltimore	UBOC	500,000	0.845	12/02/2020	500,000	07/01/2025	1,430	0.932	501,490	059231X39	27125	500,000

Northern California Power Agency
Treasurer's Report
07/31/2021

SCPA Balancing Account

Issuer	Trustee / Custodian	Stated Value	Interest Rate	Purchase Date	Purchased Price	Maturity Date	Days to Maturity	Bond* Equiv Yield	Market Value	CUSIP	Investment #	Carrying Value
Nashville Met Gov	UBOC	500,000	0.610	02/18/2021	500,000	07/01/2025	1,430	0.610	499,665	592112UB0	27174	500,000
Federal Farm Credit	UBOC	2,045,000	0.530	09/29/2020	2,045,000	09/29/2025	1,520	0.530	2,036,431	3133EMBJ0	27077	2,045,000
Federal Farm Credit	UBOC	2,050,000	0.530	09/29/2020	2,050,000	09/29/2025	1,520	0.530	2,041,452	3133EMBH4	27078	2,050,000
Apple Inc.	UBOC	500,000	0.700	02/17/2021	500,000	02/08/2026	1,652	0.699	497,525	037833EB2	27168	500,000
Federal Home Loan Ba	UBOC	500,000	0.520	02/12/2021	499,750	02/12/2026	1,656	0.530	496,565	3130AKWA0	27164	499,773
JP Morgan	UBOC	1,000,000	0.500	02/17/2021	1,000,000	02/17/2026	1,661	0.500	931,730	46632FRV9	27171	1,000,000
Federal Home Loan Ba	UBOC	125,000	0.500	02/25/2021	125,000	02/25/2026	1,669	0.500	124,431	3130AKXX9	27180	125,000
Federal Home Loan Ba	UBOC	1,000,000	0.630	02/26/2021	1,000,000	02/26/2026	1,670	0.630	995,680	3130ALB94	27195	1,000,000
Federal Farm Credit	UBOC	500,000	0.840	03/02/2021	500,000	03/02/2026	1,674	0.840	499,345	3133EMSK9	27197	500,000
Federal Farm Credit	UBOC	1,650,000	0.800	03/09/2021	1,650,000	03/09/2026	1,681	0.800	1,655,957	3133EMSU7	27201	1,650,000
Bank of America Corp	UBOC	500,000	1.200	06/28/2021	500,000	06/25/2026	1,789	1.199	500,715	06048WM64	27227	500,000
	Fund Total and Average	**$ 33,850,273**	0.925		**$ 33,792,448**		**673**	**0.962**	**$ 34,013,528**			**$ 33,871,580**

General Operating Reserve

Local Agency Investm	LAIF	21,845,024	0.322		21,845,024		1	0.322	21,845,024	SYS70000	70002	21,845,024
Union Bank of Califo	UBOC	1,036,326	0.002		1,036,326		1	0.002	1,036,326	SYS70019	70019	1,036,326
US Bank	USB	0	0.000	07/01/2020	0		1	0.000	0	SYS70051	70051	0
California Asset Mgm	CMP	512	0.050	12/14/2018	512		1	0.050	512	SYS70071	70071	512
NYC Transititional F	UBOC	1,555,000	2.900	04/15/2020	1,593,269	11/01/2021	92	1.285	1,564,999	64971Q7F4	26982	1,561,195
Microsoft Corp.	UBOC	400,000	2.375	04/26/2018	391,480	02/12/2022	195	2.972	404,004	594918BA1	26578	398,809
TD Ameritrade	UBOC	500,000	2.950	04/26/2018	492,950	04/01/2022	243	3.335	506,690	87236YAE8	26582	498,804
Apple Inc.	UBOC	4,025,452	2.300	02/01/2018	4,020,538	05/11/2022	283	2.329	4,080,158	037833CQ1	26524	4,024,558
Federal Home Loan Ba	UBOC	3,575,000	2.125	08/28/2017	3,634,560	06/10/2022	313	1.760	3,637,634	313379Q69	26467	3,585,688
PepsiCo Inc.	UBOC	500,000	3.100	04/26/2018	500,310	07/17/2022	350	3.083	511,745	713448CX4	26580	500,071
Visa Inc.	UBOC	500,000	2.800	04/26/2018	492,600	12/14/2022	500	3.145	515,865	92826CAC6	26584	497,813
US Bank, N.A.	UBOC	750,000	2.850	01/30/2019	741,900	01/23/2023	540	3.140	777,510	90331HNL3	26737	746,993
Bank of NY Mellon Co	UBOC	500,000	2.950	04/26/2018	491,790	01/29/2023	546	3.325	519,230	06406RAE7	26575	497,421
Praxair Inc	UBOC	500,000	2.700	04/26/2018	488,350	02/21/2023	569	3.225	515,600	74005PBF0	26581	496,240
Berkshire Hathaway I	UBOC	500,000	2.750	04/26/2018	488,920	03/15/2023	591	3.243	518,190	084670BR8	26576	496,321
United Parcel Servic	UBOC	500,000	2.500	04/26/2018	483,135	04/01/2023	608	3.245	517,325	911312BK1	26583	494,299
Chevron Corp.	UBOC	750,000	2.566	01/30/2019	738,750	05/16/2023	653	2.939	777,780	166764BK5	26740	745,306
Arizona Board of Reg	UBOC	1,785,000	2.011	04/17/2020	1,818,897	06/01/2023	669	1.387	1,841,192	040484VN4	26984	1,804,904
Chevron Corp.	UBOC	500,000	3.191	02/07/2019	507,025	06/24/2023	692	2.847	523,715	166764AH3	26755	503,043
Walmart, Inc.	UBOC	500,000	3.400	02/07/2019	510,960	06/26/2023	694	2.864	527,990	931142EK5	26758	504,755
Montgomery Water Wor	UBOC	2,145,000	1.799	04/17/2020	2,200,234	09/01/2023	761	1.020	2,208,385	613105KV6	26985	2,179,123
Pfizer Inc	UBOC	500,000	3.200	01/30/2019	506,250	09/15/2023	775	2.908	529,135	717081EN9	26738	502,868
Honolulu City and Co	UBOC	1,770,000	2.141	04/17/2020	1,837,189	10/01/2023	791	1.020	1,837,667	4386705V9	26983	1,812,128
Citibank NA	UBOC	500,000	3.650	02/07/2019	507,490	01/23/2024	905	3.319	537,655	17325FAS7	26756	503,741
JP Morgan	UBOC	500,000	3.875	02/07/2019	515,120	02/01/2024	914	3.535	541,700	46625HJT8	26757	507,585
US Bank, N.A.	UBOC	440,000	3.375	10/31/2019	462,862	02/05/2024	918	2.093	471,139	91159HHV5	26906	453,473
JP Morgan	UBOC	1,000,000	1.514	05/27/2020	1,006,120	06/01/2024	1,035	1.356	1,019,460	46647PBQ8	27007	1,004,323

Northern California Power Agency

Treasurer's Report

07/31/2021

General Operating Reserve

Issuer	Trustee / Custodian	Stated Value	Interest Rate	Purchase Date	Purchased Price	Maturity Date	Days to Maturity	Bond* Equiv Yield	Market Value	CUSIP	Investment #	Carrying Value
East Side Union High	UBOC	565,000	0.820	10/29/2020	565,000	08/01/2024	1,096	0.820	567,938	275282PR6	27107	565,000
Honolulu City and Co	UBOC	1,500,000	1.832	04/13/2020	1,522,710	08/01/2024	1,096	1.058	1,554,570	438687KT1	26980	1,515,844
California State Uni	UBOC	250,000	0.685	09/17/2020	250,000	11/01/2024	1,188	0.665	251,000	13077DMK5	27072	250,000
JP Morgan	UBOC	1,500,000	2.300	11/27/2019	1,500,000	11/27/2024	1,214	2.386	1,499,490	48128GM49	26912	1,500,000
Federal Home Loan Ba	UBOC	1,820,000	2.750	03/25/2020	1,981,288	12/13/2024	1,230	0.830	1,962,470	3130A3GE8	26962	1,935,125
US Bank, N.A.	UBOC	500,000	2.800	02/07/2020	522,560	01/27/2025	1,275	1.846	536,630	90331HMS9	26951	515,830
W W Grainger Inc.	UBOC	500,000	1.850	04/30/2020	516,000	02/15/2025	1,294	1.161	518,985	384802AE4	27000	511,817
W W Grainger Inc.	UBOC	500,000	1.850	05/21/2020	514,500	02/15/2025	1,294	1.217	518,985	384802AE4	27005	510,841
Memphis Center City	UBOC	500,000	2.948	11/23/2020	550,395	04/01/2025	1,339	0.600	542,370	586145F74	27114	542,424
Tulsa County OK Ind.	UBOC	1,000,000	1.500	05/26/2020	1,016,450	04/01/2025	1,339	1.038	1,031,660	899559QD3	27006	1,012,444
City of Huntsville A	UBOC	515,000	2.750	11/06/2020	560,351	05/01/2025	1,369	0.750	555,968	447025A56	27112	552,909
Arizona Public Servi	UBOC	264,000	3.150	09/25/2020	291,208	05/15/2025	1,383	0.877	285,197	040555CS1	27074	286,222
Honeywell Internatio	UBOC	1,000,000	1.350	06/03/2020	1,023,560	06/01/2025	1,400	0.866	1,022,310	438516CB0	27008	1,018,083
County of Jasper IA	UBOC	420,000	2.350	06/11/2020	443,558	06/01/2025	1,400	1.299	437,888	471376FJ7	27011	438,162
Precision Castparts	UBOC	1,500,000	3.250	06/25/2020	1,667,985	06/15/2025	1,414	1.033	1,636,830	740189AM7	27017	1,630,822
JP Morgan	UBOC	750,000	1.050	06/23/2020	750,000	06/23/2025	1,422	1.050	739,238	48128GU40	27024	750,000
Federal Home Loan Mt	UBOC	500,000	0.700	06/25/2020	500,000	06/25/2025	1,424	0.700	501,430	3134GVR26	27016	500,000
City of Baltimore	UBOC	500,000	0.845	12/02/2020	500,000	07/01/2025	1,430	0.845	501,490	059231X39	27126	500,000
Wisconsin Dept Trans	UBOC	500,000	0.774	07/30/2020	500,000	07/01/2025	1,430	0.774	501,475	977123X78	27042	500,000
East Side Union High	UBOC	815,000	0.940	10/29/2020	815,000	08/01/2025	1,461	0.940	818,130	275282PS4	27108	815,000
Federal Farm Credit	UBOC	500,000	0.680	08/04/2020	500,000	08/04/2025	1,464	0.680	499,345	3133EL2U7	27053	500,000
Federal National Mtg	UBOC	1,000,000	0.600	08/18/2020	1,000,000	08/18/2025	1,478	0.600	999,940	3136G4G72	27056	1,000,000
Federal National Mtg	UBOC	1,000,000	0.600	08/26/2020	1,000,000	08/26/2025	1,486	0.600	998,030	3136G4X32	27060	1,000,000
Federal Agricultural	UBOC	1,000,000	0.570	09/17/2020	1,000,000	09/17/2025	1,508	0.570	997,490	31422BV23	27071	1,000,000
Federal Farm Credit	UBOC	2,000,000	0.530	09/29/2020	2,000,000	09/29/2025	1,520	0.530	1,991,660	3133EMBH4	27079	2,000,000
Federal Farm Credit	UBOC	1,720,000	0.530	09/29/2020	1,720,000	09/29/2025	1,520	0.530	1,712,793	3133EMBJ0	27080	1,720,000
Federal Home Loan Ba	UBOC	1,000,000	0.520	09/29/2020	1,000,000	09/29/2025	1,520	0.520	995,620	3130AKAZ9	27081	1,000,000
Federal Home Loan Mt	UBOC	500,000	0.540	10/27/2020	500,000	10/27/2025	1,548	0.540	499,060	3134GW4Z6	27104	500,000
Bank of America Corp	UBOC	1,000,000	0.650	11/25/2020	1,000,000	11/25/2025	1,577	0.798	981,400	06048WK41	27122	1,000,000
Federal Farm Credit	UBOC	500,000	0.560	12/01/2020	500,000	12/01/2025	1,583	0.560	498,860	3133EMJC7	27124	500,000
Guardian Life	UBOC	1,520,000	0.875	05/05/2021	1,507,384	12/10/2025	1,592	1.060	1,512,309	40139LBC6	27223	1,508,040
JP Morgan	UBOC	250,000	0.825	12/22/2020	250,000	12/22/2025	1,604	0.825	240,685	48128GY53	27139	250,000
Federal National Mtg	UBOC	500,000	0.640	12/30/2020	501,000	12/30/2025	1,612	0.599	498,535	3135G06Q1	27141	500,883
Apple Inc.	UBOC	500,000	0.700	02/17/2021	500,000	02/08/2026	1,652	0.699	497,525	037833EB2	27169	500,000
JP Morgan	UBOC	1,000,000	0.500	02/17/2021	1,000,000	02/17/2026	1,661	0.500	931,730	46632FRV9	27172	1,000,000
Charles Schwab Corp	UBOC	630,000	0.900	04/30/2021	625,407	03/11/2026	1,683	1.054	629,742	808513BF1	27220	625,646
Federal Home Loan Ba	UBOC	1,000,000	0.790	03/25/2021	997,500	03/16/2026	1,688	0.841	998,290	3130ALEL4	27203	997,676
Federal Home Loan Ba	UBOC	1,000,000	1.010	03/30/2021	1,000,000	03/30/2026	1,702	1.010	1,000,640	3130ALTT1	27213	1,000,000
Oregon State Dept o	UBOC	500,000	1.119	04/27/2021	500,000	04/01/2026	1,704	1.119	505,320	68607V2Q7	27216	500,000
Federal Home Loan Ba	UBOC	500,000	0.625	04/21/2021	500,000	04/21/2026	1,724	1.084	503,530	3130ALXR0	27215	500,000
United Health Group	UBOC	550,000	1.150	06/28/2021	551,826	05/15/2026	1,748	1.079	554,868	91324PEC2	27232	551,792
Bank of America Corp	UBOC	1,108,000	1.250	05/28/2021	1,108,000	05/28/2026	1,761	1.250	1,108,598	06048WM31	27226	1,108,000

Northern California Power Agency

Treasurer's Report

07/31/2021

General Operating Reserve

Issuer	Trustee / Custodian	Stated Value	Interest Rate	Purchase Date	Purchased Price	Maturity Date	Days to Maturity	Bond* Equiv Yield	Market Value	CUSIP	Investment #	Carrying Value
Bank of America Corp	UBOC	1,250,000	1.200	06/28/2021	1,250,000	06/25/2026	1,789	1.199	1,251,788	06048WM64	27228	1,250,000
	Fund Total and Average	**$ 83,004,314**	1.355		**$ 83,814,243**		**796**	**1.099**	**$ 84,158,442**			**$ 83,563,883**
	GRAND TOTALS:	**$ 220,718,224**	0.954		**$ 221,226,214**		**545**	**0.895**	**$ 222,541,151.**			**$ 221,253,745**

***Bond Equivalent Yield to Maturity is shown based on a 365 day year to provide a basis for comparison between all types. Investments with less than 6 months to maturity use an approximate method, all others use an exact method.**

Current Market Value is based on prices from Trustee/ Custodian Statements or bid prices from the Wall Street Journal as of 07/31/2021

Callable Dates:

Inv #		
26646	USB	6/23/2023
26848	WMT	1/11/2023
26887	TOY	Semi-annually starting 09/27/2021
26888	FFCB	Anytime starting 09/27/2021
26906	USBANK	1/5/2024
26912	JPM	Quarterly starting 11/27/2021
26947	USBANK	Anytime starting 12/27/2024
26951	USBANK	Anytime starting 12/27/2024
26960	FFCB	Anytime
26980	HON	Anytime
26982	NYCGEN	Anytime
26983	HON	Anytime
26984	AZSHGR	Anytime
27007	JPM	6/1/2023 and then starting on 5/1/2024
27009	FNMA	Quarterly
27011	JAS	6/1/2024
27015	FHLMC	Annually
27016	FHLMC	Annually
27024	JPM	Quarterly starting 6/23/2024
27029	MAS	Anytime
27041	WISTRN	Anytime
27042	WISTRN	Anytime
27043	FNMA	Quarterly
27052	FFCB	Anytime

Inv #		
27053	FFCB	Anytime
27055	CASWTR	Anytime
27056	FNMA	Quarterly starting 8/18/2022
27058	PHOGEN	Anytime
27060	FNMA	Quarterly starting 8/26/2021
27071	FAMC	Semi-annually starting 09/17/2021
27072	CASHGR	Anytime
27077	FFCB	Anytime
27078	FFCB	Anytime starting 9/29/2021
27079	FFCB	Anytime starting 9/29/2021
27080	FFCB	Anytime
27081	FHLB	Anytime
27104	FHLMC	Annually starting 10/27/2022
27110	CASMED	Anytime
27113	MEMGEN	Anytime
27114	MEMGEN	Anytime
27122	BAC	11/25/2021
27124	FFCB	Anytime starting 12/1/2022
27125	BALGEN	Anytime
27126	BALGEN	Anytime
27137	FNMA	Annually starting 11/18/2022
27138	JPM	Quarterly starting 12/22/2023
27139	JPM	Quarterly starting 12/22/2023
27141	FNMA	Quarterly starting 12/30/2021

Inv #		
27149	TOY	1/20/2025 and 7/20/2025
27164	FHLB	Anytime starting 8/12/2021
27168	APPL	Anytime starting 1/8/2026
27169	APPL	Anytime starting 1/8/2026
27171	JPM	Quarterly starting 2/17/2023
27172	JPM	Quarterly starting 2/17/2023
27178	LOUIS	Anytime
27179	FHLB	2/25/2022
27180	FHLB	2/25/2022
27180	FFCB	Anytime
27195	FHLB	Quarterly starting 8/26/2021
27196	FFCB	Anytime
27197	FFCB	Anytime
27200	FFCB	Anytime starting 3/9/2023
27201	FFCB	Anytime starting 3/9/2023
27202	WIS	Anytime
27203	FHLB	Quarterly
27213	FHLB	Quarterly
27215	FHLB	4/21/2023 only
27216	ORSGEN	Anytime
27220	SCHW	2/11/2026
27225	BAC	Semi-annually starting 05/28/2022
27226	BAC	Semi-annually starting 05/28/2022
27227	BAC	Semi-annually starting 06/25/2022
27228	BAC	Semi-annually starting 06/25/2022

Northern California Power Agency
Treasurer's Report
07/31/2021

GEO 2012 Construction Fund

Issuer	Trustee / Custodian	Stated Value	Interest Rate	Purchase Date	Purchased Price	Maturity Date	Days to Maturity	Bond* Equiv Yield	Market Value	CUSIP	Investment #	Carrying Value
U.S. Treasury	USBT	911,000	0.029	07/23/2021	910,948	09/30/2021	60	0.030	910,927	912796F61	27233	910,954
	Fund Total and Average	**$ 911,000**	0.030		**$ 910,948**		**60**	**0.030**	**$ 910,927**			**$ 910,954**

Geo 2012A Debt Service

U.S. Treasury	USBT	126,000	0.030	07/23/2021	125,983	12/30/2021	151	0.030	125,971	912796A90	27235	125,984
	Fund Total and Average	**$ 126,000**	0.030		**$ 125,983**		**151**	**0.030**	**$ 125,971**			**$ 125,984**

Geo 2016A Debt Service

U.S. Treasury	USBT	290,000	0.030	07/23/2021	289,961	12/30/2021	151	0.030	289,933	912796A90	27236	289,964
	Fund Total and Average	**$ 290,000**	0.030		**$ 289,961**		**151**	**0.030**	**$ 289,933**			**$ 289,964**

Geothermal Special Reserve

Union Bank of Califo	UBOC	5,000	0.002	07/01/2020	5,000		1	0.002	5,000	SYS70015	70015	5,000
Federal National Mtg	UBOC	1,495,000	0.500	02/16/2021	1,497,796	11/07/2025	1,559	0.460	1,488,512	3135G06G3	27167	1,497,524
	Fund Total and Average	**$ 1,500,000**	0.498		**$ 1,502,796**		**1554**	**0.458**	**$ 1,493,512**			**$ 1,502,524**

Geo Decommissioning Reserve

Local Agency Investm	LAIF	700,131	0.322		700,131		1	0.322	700,131	SYS70027	70027	700,131
Union Bank of Califo	UBOC	53,775	0.002		53,775		1	0.002	53,775	SYS70034	70034	53,775
Ally Bank	UBOC	250,000	3.000	08/30/2018	250,000	08/30/2021	29	3.002	250,630	02007GEQ2A	30312	250,000
PNC Bank NA	UBOC	750,000	2.550	03/15/2018	735,450	12/09/2021	130	3.103	754,763	69353REY0	26553	748,614
Apple Inc.	UBOC	861,211	2.300	11/29/2017	860,117	05/11/2022	283	2.329	872,915	037833CQ1	26499	861,020
University of Califo	UBOC	1,000,000	2.312	04/30/2020	1,024,800	05/15/2022	287	1.080	1,016,080	91412G2T1	27001	1,009,583
Wells Fargo Bank	UBOC	250,000	3.150	08/30/2018	250,000	08/30/2022	394	3.154	258,203	949763TL0A	30311	250,000
Great North Bank	UBOC	250,000	3.050	08/31/2018	250,000	08/31/2022	395	3.051	257,950	39103QAF3A	30310	250,000
Discover Bank	UBOC	250,000	3.150	09/06/2018	250,000	09/06/2022	401	3.152	258,335	254673TM8A	30313	250,000
John Deere Capital C	UBOC	750,000	2.800	03/15/2018	739,748	01/27/2023	544	3.104	778,365	24422ERT8	26550	746,863
Bank of NY Mellon Co	UBOC	750,000	2.950	03/15/2018	740,610	01/29/2023	546	3.229	778,845	06406RAE7	26549	747,120
Crook County School	UBOC	355,000	1.563	05/07/2020	356,211	06/15/2023	683	1.450	361,479	227183DH0	27003	355,730
Solano County CCD	UBOC	385,000	5.500	04/09/2020	434,938	08/01/2023	730	1.471	424,074	83412PCN0	26978	415,164
Enerbank USA	UBOC	250,000	3.200	08/30/2018	250,000	08/30/2023	759	3.203	264,955	29278TCP3A	30309	250,000
Citibank NA	UBOC	250,000	3.300	09/07/2018	250,000	09/07/2023	767	3.301	265,598	17312QS34A	30314	250,000
Federal Farm Credit	UBOC	1,590,000	0.875	04/08/2020	1,590,000	04/08/2024	981	0.875	1,598,332	3133ELVX9	26976	1,590,000
Sacramento Suburban	UBOC	330,000	3.480	04/09/2020	349,473	11/01/2024	1,188	1.846	347,648	78607QAY1	26977	343,876

Northern California Power Agency

Treasurer's Report

07/31/2021

Geo Decommissioning Reserve

Issuer	Trustee / Custodian	Stated Value	Interest Rate	Purchase Date	Purchased Price	Maturity Date	Days to Maturity	Bond* Equiv Yield	Market Value	CUSIP	Investment #	Carrying Value
W W Grainger Inc.	UBOC	425,000	1.850	04/30/2020	438,600	02/15/2025	1,294	1.161	441,137	384802AE4	27002	435,044
California St Hlth F	UBOC	500,000	0.952	11/04/2020	500,000	06/01/2025	1,400	0.952	501,670	13032UXM5	27111	500,000
Federal National Mtg	UBOC	1,000,000	0.710	06/04/2020	1,000,000	06/04/2025	1,403	0.710	999,820	3136G4WA7	27010	1,000,000
Houston Airport Sys	UBOC	750,000	1.372	10/20/2020	750,000	07/01/2025	1,430	1.372	765,398	442349EM4	27102	750,000
Nashville Met Gov	UBOC	500,000	0.610	02/18/2021	500,000	07/01/2025	1,430	0.610	499,665	592112UB0	27175	500,000
East Side Union High	UBOC	1,000,000	0.940	10/29/2020	1,000,000	08/01/2025	1,461	0.940	1,003,840	275282PS4	27109	1,000,000
Federal Home Loan Mt	UBOC	1,000,000	0.540	09/15/2020	1,000,000	09/15/2025	1,506	0.540	998,260	3134GWL38	27070	1,000,000
Federal Farm Credit	UBOC	565,000	0.530	09/29/2020	565,000	09/29/2025	1,520	0.530	562,644	3133EMBH4	27082	565,000
Federal Home Loan Mt	UBOC	1,500,000	0.530	10/15/2020	1,500,000	10/15/2025	1,536	0.530	1,495,260	3134GWY34	27101	1,500,000
Guardian Life	UBOC	505,000	0.875	05/05/2021	500,809	12/10/2025	1,592	1.060	502,445	40139LBC6	27224	501,026
Apple Inc.	UBOC	1,000,000	0.700	02/08/2021	1,000,000	02/08/2026	1,652	0.700	995,050	037833EB2	27162	1,000,000
Federal Farm Credit	UBOC	500,000	0.840	03/02/2021	500,000	03/02/2026	1,674	0.840	499,345	3133EMSK9	27198	500,000
JP Morgan	UBOC	500,000	1.200	04/30/2021	500,000	04/30/2026	1,733	1.200	497,005	48128G3G3	27218	500,000
Bank of America Corp	UBOC	750,000	1.200	06/28/2021	750,000	06/25/2026	1,789	1.199	751,073	06048WM64	27229	750,000
New York City Genera	UBOC	585,000	2.040	04/30/2021	583,204	03/01/2030	3,134	2.078	600,824	64966QUX6	27219	583,255
Federal Home Loan Ba	UBOC	1,000,000	1.000	02/10/2021	1,000,000	02/10/2031	3,480	1.360	982,240	3130AKX76	27163	1,000,000
Federal Agricultural	UBOC	972,000	1.460	02/18/2021	972,000	02/18/2031	3,488	1.460	969,657	31422XAU6	27177	972,000
Federal Agricultural	UBOC	600,000	1.460	07/30/2021	598,800	02/18/2031	3,488	1.482	598,554	31422XAU6	27246	598,800
Federal Home Loan Ba	UBOC	2,000,000	1.740	07/29/2021	2,006,440	07/29/2031	3,649	1.704	2,001,680	3130AN7G9	27245	2,006,436
	Fund Total and Average	**$ 24,677,117**	1.529		**$ 24,750,106**		**1570**	**1.427**	**$ 24,907,645**			**$ 24,733,437**
	GRAND TOTALS:	**$ 27,504,117**	1.401		**$ 27,579,794**		**1498**	**1.307**	**$ 27,727,988.**			**$ 27,562,863**

***Bond Equivalent Yield to Maturity is shown based on a 365 day year to provide a basis for comparison between all types.**
Investments with less than 6 months to maturity use an approximate method, all others use an exact method.

Current Market Value is based on prices from Trustee/ Custodian Statements or bid prices from the Wall Street Journal as of 07/31/2021

Callable Dates:

Inv #		
26976	FFCB	Anytime starting 4/8/2022
26977	SCRWTR	Anytime
27001	UNVHGR	Anytime
27010	FNMA	Quarterly
27070	FHLMC	Quarterly starting 9/15/2022
27082	FFCB	Anytime starting 9/29/2021
27101	FHLMC	Annually starting 10/15/2021
27111	CASMED	Anytime
27162	APPL	Anytime starting 1/8/2026
27163	FHLB	Callable on 8/10/2021
27177	FAMC	Semi-annually starting 2/18/2022
27198	FFCB	Anytime
27218	JPM	Annually starting 4/30/2023
27219	NYC	Anytime
27229	BAC	Semi-annually starting 6/25/2022
27245	FHLB	Anytime starting 7/9/2022
27246	FAMC	Semi-annually starting 2/18/2022

Northern California Power Agency
Treasurer's Report
07/31/2021

Capital Dev. Reserve Hydro

Issuer	Trustee / Custodian	Stated Value	Interest Rate	Purchase Date	Purchased Price	Maturity Date	Days to Maturity	Bond* Equiv Yield	Market Value	CUSIP	Investment #	Carrying Value
Local Agency Investm	LAIF	5,214,687	0.322		5,214,687		1	0.322	5,214,687	SYS70028	70028	5,214,687
Union Bank of Califo	UBOC	563,049	0.002		563,049		1	0.002	563,049	SYS70031	70031	563,049
Branch Banking & Tru	UBOC	500,000	2.625	06/13/2018	488,420	01/15/2022	167	3.314	504,420	07330NAQ8	26618	498,530
Exxon Mobil Corporat	UBOC	500,000	2.397	06/13/2018	490,350	03/06/2022	217	2.946	504,740	30231GAJ1	26621	498,455
US Bank	UBOC	550,000	3.000	08/10/2018	546,607	03/15/2022	226	3.182	558,300	91159HHC7	26651	549,413
Public Storage	UBOC	500,000	2.370	03/14/2018	485,770	09/15/2022	410	3.051	511,140	74460DAB5	26546	496,453
Visa Inc.	UBOC	500,000	2.800	03/14/2018	494,470	12/14/2022	500	3.051	515,865	92826CAC6	26547	498,406
Toyota Motor Credit	UBOC	500,000	2.700	06/13/2018	489,100	01/11/2023	528	3.215	517,410	89236TEL5	26619	496,561
United Parcel Servic	UBOC	500,000	2.500	06/13/2018	484,900	04/01/2023	608	3.182	517,325	911312BK1	26620	494,757
Colgate-Palmolive Co	UBOC	550,000	2.100	08/09/2018	528,660	05/01/2023	638	2.985	566,781	19416QEC0	26652	542,101
Federal Home Loan Mt	UBOC	500,000	0.375	08/03/2020	500,000	08/03/2023	732	0.375	500,005	3134GWJC1	27051	500,000
J Paul Getty Trust	UBOC	1,000,000	0.391	01/28/2021	1,000,000	01/01/2024	883	0.401	997,410	374288AB4	27161	1,000,000
Nashville Met Gov	UBOC	250,000	1.030	12/17/2020	250,000	08/01/2024	1,096	1.029	252,483	592090GB4	27134	250,000
Califorina Infra & E	UBOC	100,000	0.645	12/17/2020	100,000	10/01/2024	1,157	0.683	100,282	13034AL57	27135	100,000
Walmart, Inc.	UBOC	500,000	2.650	02/07/2020	520,975	12/15/2024	1,232	1.744	534,270	931142DV2	26950	514,567
Bank of NY Mellon Co	UBOC	545,000	1.600	04/30/2021	561,197	04/24/2025	1,362	0.839	560,860	06406RAN7	27221	560,170
Federal Agricultural	UBOC	500,000	0.675	05/19/2020	500,000	05/19/2025	1,387	0.675	501,030	31422BA26	27004	500,000
Nashville Met Gov	UBOC	250,000	1.230	12/17/2020	250,000	08/01/2025	1,461	1.229	253,408	592090GC2	27133	250,000
City of El Paso TX	UBOC	500,000	4.346	12/07/2020	553,420	08/15/2025	1,475	1.950	539,500	283734TC5	27131	546,015
Federal National Mtg	UBOC	440,000	0.600	08/26/2020	440,000	08/26/2025	1,486	0.600	439,133	3136G4X32	27059	440,000
Califorina Infra & E	UBOC	130,000	0.765	12/17/2020	130,000	10/01/2025	1,522	0.765	130,129	13034AL65	27132	130,000
Bank of America Corp	UBOC	1,000,000	0.650	11/25/2020	1,000,000	11/25/2025	1,577	0.798	981,400	06048WK41	27121	1,000,000
Federal National Mtg	UBOC	500,000	0.650	12/17/2020	500,850	12/10/2025	1,592	0.615	498,625	3135G06J7	27136	500,744
JP Morgan	UBOC	500,000	0.825	12/22/2020	500,000	12/22/2025	1,604	0.825	481,370	48128GY53	27140	500,000
Federal National Mtg	UBOC	500,000	0.640	01/06/2021	501,550	12/30/2025	1,612	0.576	498,535	3135G06Q1	27148	501,373
Federal Home Loan Ba	UBOC	500,000	0.520	02/12/2021	499,750	02/12/2026	1,656	0.530	496,565	3130AKWA0	27165	499,773
Federal Home Loan Ba	UBOC	500,000	0.500	02/25/2021	500,000	02/25/2026	1,669	0.500	497,725	3130AKXX9	27181	500,000
Federal Home Loan Ba	UBOC	500,000	0.625	04/21/2021	500,000	04/21/2026	1,724	1.084	503,530	3130ALXR0	27214	500,000
United Health Group	UBOC	500,000	1.150	06/28/2021	501,660	05/15/2026	1,748	1.082	504,425	91324PEC2	27231	501,629
	Fund Total and Average	**$ 19,092,736**	1.137		**$ 19,095,415**		**774**	**1.156**	**$ 19,244,402**			**$ 19,146,683**

Hydro Initial Facilities

U.S. Treasury	USBT	4,236,000	0.030	07/23/2021	4,235,756	09/30/2021	60	0.030	4,235,661	912796F61	27234	4,235,788
	Fund Total and Average	**$ 4,236,000**	0.030		**$ 4,235,756**		**60**	**0.030**	**$ 4,235,661**			**$ 4,235,788**

Hydro Debt Service

U.S. Treasury	USBT	7,871,000	0.030	07/23/2021	7,869,951	12/30/2021	151	0.030	7,869,190	912796A90	27237	7,870,010

Northern California Power Agency

Treasurer's Report

07/31/2021

Hydro Debt Service

Issuer	Trustee / Custodian	Stated Value	Interest Rate	Purchase Date	Purchased Price	Maturity Date	Days to Maturity	Bond* Equiv Yield	Market Value	CUSIP	Investment #	Carrying Value
	Fund Total and Average	**$ 7,871,000**	0.030		**$ 7,869,951**		**151**	**0.030**	**$ 7,869,190**			**$ 7,870,010**

Hydro 2018A Debt Service

U.S. Treasury	USBT	1,147,000	0.029	07/23/2021	1,146,847	12/30/2021	151	0.030	1,146,736	912796A90	27238	1,146,856
	Fund Total and Average	**$ 1,147,000**	0.030		**$ 1,146,847**		**151**	**0.030**	**$ 1,146,736**			**$ 1,146,856**

Hydro 2019A Debt Service

U.S. Treasury	USBT	814,000	0.029	07/23/2021	813,891	12/30/2021	151	0.030	813,813	912796A90	27239	813,898
	Fund Total and Average	**$ 814,000**	0.030		**$ 813,891**		**151**	**0.030**	**$ 813,813**			**$ 813,898**

Hydro 2012A Rebate Account

Federal Home Loan Mt	USB	689,000	1.875	04/28/2017	691,391	08/09/2021	8	1.790	689,241	3134G93A3	26432	689,012
	Fund Total and Average	**$ 689,000**	1.875		**$ 691,391**		**8**	**1.790**	**$ 689,241**			**$ 689,012**

Hydro Special Reserve

Union Bank of Califo	UBOC	5,000	0.002	07/01/2020	5,000		1	0.002	5,000	SYS70016	70016	5,000
Federal National Mtg	UBOC	1,495,000	0.500	02/16/2021	1,497,796	11/07/2025	1,559	0.460	1,488,512	3135G06G3	27166	1,497,524
	Fund Total and Average	**$ 1,500,000**	0.498		**$ 1,502,796**		**1554**	**0.458**	**$ 1,493,512**			**$ 1,502,524**

Hydro 2012 DSRA

Federal Home Loan Mt	USB	3,928,000	2.375	02/09/2012	3,926,232	01/13/2022	165	2.380	3,968,537	3137EADB2	25852	3,927,920
U.S. Treasury	USBT	387,000	0.030	04/28/2021	386,892	03/24/2022	235	0.030	386,880	912796F38	27217	386,923
U.S. Treasury	USBT	301,000	0.020	07/23/2021	300,959	03/24/2022	235	0.020	300,907	912796F38	27243	300,960
	Fund Total and Average	**$ 4,616,000**	2.025		**$ 4,614,083**		**175**	**2.029**	**$ 4,656,324**			**$ 4,615,803**
	GRAND TOTALS:	**$ 39,965,736**	0.839		**$ 39,970,130**		**492**	**0.846**	**$ 40,148,879.**			**$ 40,020,574**

***Bond Equivalent Yield to Maturity is shown based on a 365 day year to provide a basis for comparison between all types. Investments with less than 6 months to maturity use an approximate method, all others use an exact method.**

Current Market Value is based on prices from Trustee/ Custodian Statements or bid prices from the Wall Street Journal as of 07/31/2021

Callable Dates:

26950	WMT	Anytime starting 10/15/2024
27004	FAMCA	Semi-annually starting 5/19/2022
27051	FHLMC	Quarterly starting 8/03/2021
27059	FNMA	Quarterly starting 8/26/2021
27121	BAC	11/25/2021 only
27131	ELPASO	Callable annually starting 8/15/2023
27132	FFCB	Anytime
27135	CASDEV	Anytime
27136	FNMA	Quarterly
27140	JPM	Quarterly starting 12/22/2023
27161	JPGETY	Anytime starting 10/1/2023
27165	FHLB	Anytime starting 8/12/2021
27181	FHLB	2/25/2022 only
27214	FHLB	4/21/2023 only
27221	BK	3/24/2025

Northern California Power Agency

Treasurer's Report

07/31/2021

Cap Facilities 2019A Debt Svc

Issuer	Trustee / Custodian	Stated Value	Interest Rate	Purchase Date	Purchased Price	Maturity Date	Days to Maturity	Bond* Equiv Yield	Market Value	CUSIP	Investment #	Carrying Value
US Bank Trust	USBT	4,529,190	0.005		4,529,190		1	0.005	4,529,190	SYS79017	79017	4,529,190
	Fund Total and Average	**$ 4,529,190**	0.005		**$ 4,529,190**		**1**	**0.005**	**$ 4,529,190**			**$ 4,529,190**
	GRAND TOTALS:	**$ 4,529,190**	0.005		**$ 4,529,190**		**1**	**0.005**	**$ 4,529,190.**			**$ 4,529,190**

***Bond Equivalent Yield to Maturity is shown based on a 365 day year to provide a basis for comparison between all types. Investments with less than 6 months to maturity use an approximate method, all others use an exact method.**

Current Market Value is based on prices from Trustee/ Custodian Statements or bid prices from the Wall Street Journal as of 07/31/2021

Northern California Power Agency
Treasurer's Report
07/31/2021

LEC GHG Auction Acct

Issuer	Trustee / Custodian	Stated Value	Interest Rate	Purchase Date	Purchased Price	Maturity Date	Days to Maturity	Bond* Equiv Yield	Market Value	CUSIP	Investment #	Carrying Value
Local Agency Investm		141,397	0.322		141,397		1	0.322	141,397	SYS70046	70046	141,397
	Fund Total and Average	**$ 141,397**	0.322		**$ 141,397**		**1**	**0.322**	**$ 141,397**			**$ 141,397**

LEC Issue #1 2010B DS Fund

US Bank Trust	USB	1,167	0.005		1,167		1	0.005	1,167	SYS79004	79004	1,167
U.S. Treasury	USBT	4,988,000	0.030	07/23/2021	4,987,476	11/26/2021	117	0.030	4,987,252	912796H77	27240	4,987,514
	Fund Total and Average	**$ 4,989,167**	0.030		**$ 4,988,643**		**117**	**0.030**	**$ 4,988,419**			**$ 4,988,681**

LEC Issue #2 2010B DS Fund

US Bank Trust	USB	1,119	0.005		1,119		1	0.005	1,119	SYS79012	79012	1,119
U.S. Treasury	USBT	2,940,000	0.030	07/23/2021	2,939,691	11/26/2021	117	0.030	2,939,559	912796H77	27241	2,939,713
	Fund Total and Average	**$ 2,941,119**	0.030		**$ 2,940,810**		**117**	**0.030**	**$ 2,940,678**			**$ 2,940,832**

LEC Issue#1 2017A DS Fund

U.S. Treasury	USBT	1,334,000	0.030	07/23/2021	1,333,860	11/26/2021	117	0.030	1,333,800	912796H77	27242	1,333,870
	Fund Total and Average	**$ 1,334,000**	0.030		**$ 1,333,860**		**117**	**0.030**	**$ 1,333,800**			**$ 1,333,870**

LEC Issue #1 2010 DSR Fund

US Bank Trust	USB	154	0.005		154		1	0.005	154	SYS79005	79005	154
Federal Home Loan Mt	USB	150,000	1.125	07/28/2017	146,648	08/12/2021	11	1.699	150,045	3137EAEC9	26454	149,975
Federal Home Loan Ba	USB	4,100,000	2.125	08/28/2017	4,168,306	06/10/2022	313	1.760	4,171,832	313379Q69	26463	4,112,257
U.S. Treasury	USBT	509,000	0.035	07/23/2021	508,835	06/16/2022	319	0.036	508,710	912796J42	27244	508,840
Federal Farm Credit	USBT	4,430,000	0.840	03/02/2021	4,430,000	03/02/2026	1,674	0.840	4,424,197	3133EMSK9	27199	4,430,000
	Fund Total and Average	**$ 9,189,154**	1.374		**$ 9,253,943**		**964**	**1.221**	**$ 9,254,938**			**$ 9,201,226**

LEC Iss#1 2010B BABS Subs Resv

US Bank Trust	USB	2,369,804	0.005		2,369,804		1	0.005	2,369,804	SYS79006	79006	2,369,804
	Fund Total and Average	**$ 2,369,804**	0.005		**$ 2,369,804**		**1**	**0.005**	**$ 2,369,804**			**$ 2,369,804**

LEC Issue #2 2010B DSR BABS

US Bank Trust	USB	1,142,736	0.005	07/01/2020	1,142,736		1	0.005	1,142,736	SYS79013	79013	1,142,736

Northern California Power Agency

Treasurer's Report

07/31/2021

LEC Issue #2 2010B DSR BABS

Issuer	Trustee / Custodian	Stated Value	Interest Rate	Purchase Date	Purchased Price	Maturity Date	Days to Maturity	Bond* Equiv Yield	Market Value	CUSIP	Investment #	Carrying Value
	Fund Total and Average	**$ 1,142,736**	0.005		**$ 1,142,736**		**1**	**0.005**	**$ 1,142,736**			**$ 1,142,736**

LEC O & M Reserve

Local Agency Investm		1,551,917	0.322		1,551,917		1	0.322	1,551,917	SYS70047	70047	1,551,917
Union Bank of Califo	UBOC	1,102,209	0.002		1,102,209		1	0.002	1,102,209	SYS70041	70041	1,102,209
Toyota Motor Credit	UBOC	495,000	1.800	02/03/2020	496,995	10/07/2021	67	1.555	496,480	89236TGJ8	26953	495,218
Memphis Center City	UBOC	500,000	5.530	04/27/2020	533,880	11/01/2021	92	1.000	506,550	58607ECD4	26986	505,605
US Bank, N.A.	UBOC	595,000	2.650	05/31/2019	598,290	05/23/2022	295	2.456	605,698	90331HPC1	26822	595,896
Caterpillar Financia	UBOC	465,000	3.250	02/03/2020	496,569	12/01/2024	1,218	1.776	506,111	14912L6G1	26952	486,797
Nashville Met Gov	UBOC	500,000	0.610	02/18/2021	500,000	07/01/2025	1,430	0.610	499,665	592112UB0	27176	500,000
Federal National Mtg	UBOC	1,000,000	0.600	07/30/2020	1,001,000	07/29/2025	1,458	0.579	1,000,150	3136G4D75	27047	1,000,799
Federal Farm Credit	UBOC	2,000,000	0.670	08/04/2020	2,000,000	08/04/2025	1,464	0.670	1,997,160	3133EL2S2	27054	2,000,000
Federal National Mtg	UBOC	1,000,000	0.600	08/18/2020	1,000,000	08/18/2025	1,478	0.600	999,940	3136G4G72	27057	1,000,000
Federal Farm Credit	UBOC	750,000	0.530	09/29/2020	750,000	09/29/2025	1,520	0.530	746,873	3133EMBH4	27083	750,000
Federal Farm Credit	UBOC	670,000	0.530	09/29/2020	670,000	09/29/2025	1,520	0.530	667,193	3133EMBJ0	27084	670,000
Apple Inc.	UBOC	500,000	0.700	02/17/2021	500,000	02/08/2026	1,652	0.699	497,525	037833EB2	27170	500,000
JP Morgan	UBOC	500,000	1.200	04/30/2021	500,000	04/30/2026	1,733	1.200	497,005	48128G3G3	27222	500,000
	Fund Total and Average	**$ 11,629,126**	1.021		**$ 11,700,860**		**968**	**0.741**	**$ 11,674,476**			**$ 11,658,441**
	GRAND TOTALS:	**$ 33,736,503**	0.737		**$ 33,872,053**		**629**	**0.598**	**$ 33,846,248.**			**$ 33,776,987**

***Bond Equivalent Yield to Maturity is shown based on a 365 day year to provide a basis for comparison between all types. Investments with less than 6 months to maturity use an approximate method, all others use an exact method.**

Current Market Value is based on prices from Trustee/ Custodian Statements or bid prices from the Wall Street Journal as of 07/31/2021

Callable Dates:

Inv #		
26822	USB	Anytime starting 4/22/2022
27047	FHLMC	Quarterly starting 7/29/2022
27054	FFCB	Anytime
27057	FNMA	Quarterly starting 8/18/2022
27083	FFCB	Anytime starting 9/29/2021
27084	FFCB	Anytime
27170	APPL	Anytime starting 1/8/2026
27199	FFCB	Anytime
27222	JPM	Annually starting 4/30/2023

12

Commission Staff Report

COMMISSION MEETING DATE: August 26, 2021

SUBJECT: Disposal of Northern California Power Agency Surplus Property

AGENDA CATEGORY: Consent

FROM:	Monty Hanks	**METHOD OF SELECTION:**
	Assistant General Manager	N/A
Division:	Administrative Services	
Department:	Accounting & Finance	

IMPACTED MEMBERS:

All Members	☒	**City of Lodi**	☐	**City of Shasta Lake**	☐
Alameda Municipal Power	☐	**City of Lompoc**	☐	**City of Ukiah**	☐
San Francisco Bay Area Rapid Transit	☐	**City of Palo Alto**	☐	**Plumas-Sierra REC**	☐
City of Biggs	☐	**City of Redding**	☐	**Port of Oakland**	☐
City of Gridley	☐	**City of Roseville**	☐	**Truckee Donner PUD**	☐
City of Healdsburg	☐	**City of Santa Clara**	☐	**Other**	☐

If other, please specify

_____

_____

RECOMMENDATION:

Recommending the Northern California Power Agency (NCPA) Commission note and file the report by all members for the disposal of the following:

- E-waste from Lodi Energy Center

BACKGROUND:

The NCPA Policy for the Disposal or Destruction of Surplus Supplies, Materials, or Equipment requires that such disposal or destruction be reported to the NCPA Commission within 60 days of such action.

In accordance with that policy the above listed items have been disposed of due to being obsolete and having no value to the Agency.

FISCAL IMPACT:

This report has no direct fiscal impact to the Agency.

ENVIRONMENTAL ANALYSIS:

This activity would not result in a direct or reasonably foreseeable indirect change in the physical environment and is therefore not a "project" for purposes of Section 21065 the California Environmental Quality Act. No environmental review is necessary.

Respectfully submitted,

RANDY S. HOWARD
General Manager

Attachments: Declarations of Surplus
Receipts of disposal

NCPA

NORTHERN CALIFORNIA POWER AGENCY
DECLARATION OF EXCESS

Date: 8/3/2020

	QTY	U/M*	DESCRIPTION (Including All Applicable Model #'s, LCNs & VINs)	COND**	ESTIMATED VALUE UNIT	ESTIMATED VALUE TOTAL	NCPA Property# / Stock # / Fleet # or Project #	SITE LOCATION
1.	~~1~~	~~Each~~	~~2002 Ford F450 Bucket Truck~~ truck transferred to Hydro	S*		N/A	#766	CT2/LEC
2.	1	Lot	E-Waste	S		N/A	N/A	CT2/LEC
3.								
4.								
5.								
6.								
7.								
8.								
9.								

JUSTIFICATION FOR EXCESS/DISPOSAL: The truck cannot be sold because it does not meet the emission requirements as laid out in the California Air Resources Board Fleet Rule for Public Agencies and Utilities. Also, need to discard of e-waste.

RECOMMENDED DISPOSITION: Trade-in towards new truck or take to a wrecking yard. Scrap e-waste

PREPARED BY: Michael DeBortoli Michael DeBortoli
ORG.
APPROVED BY: [signature] **CODE:** _____
(ASST. GEN. MANAGER)
AUTHORIZATION TO PROCEED: [signature] **DATE:** 8/5/20
(GENERAL MANAGER)

_____ **PUBLIC SALE** _____ **PRIVATE SALE**
_____ **DISPOSAL - NO NET SCRAP VALUE**

***U/M = UNIT OF MEASURE**

**** CONDITION: EXCELLENT (E), GOOD (G), AVERAGE POOR (P), SCRAP (S)**

ORIGINAL TO TREASURER-CONTROLLER

FREMOUW ENVIRONMENTAL SERVICES, INC.

Send Payment to:
6940 Tremont Road
Dixon, CA 95620
www.fremouwenvironmental.com

Phone: 800-559-3274
Phone: 707-448-3700
Fax: 707-448-3499

EPA ID # CAR000171017
U.S.D.O.T. # 1484667
D.T.S.C. # 3544
CA # 274461

CSLB A-Eng #1022665
Small Business # 56427

INVOICE # 93744

Date [illegible]

SITE ADDRESS
Customer NCPA LEC/Stig
12745 N Thornton Rd.
Lodi, CA 95242

BILLING/MAILING ADDRESS
Customer Northern CA Power Agency
ATTN: Northern CA Power Agency
PO Box 1478
Lodi, CA 95242

E.P.A. # CAL 000 443 715

Phone (209) 712-9398

OPEN PO

Additional Contacts: # 5300803** Mike Fallon

PAYMENT TERMS: NET 15

PRODUCT - SERVICE INFORMATION/PROPER SHIPPING DESCRIPTION/BILL OF LADING

7 • 14 • 21 • 30 • 45 • 60 • 90 • 180 • 365 W/C	WASTE CODE	MANIFEST NUMBER	QUANTITY	UNITS	PRICE	AMOUNT
Universal Waste Devices for Recycling / Misc. E-Waste	N/a	~~9347~~ 93144		Lbs.	0.65	
1 Ton Pickup/Flat Bed or Box Truck / Includes up to 1hr on site	N/a			Stop	N/C	
Labor / If over 1hr on site	N/a			Hour	95.00	

SERVICES REQUESTED BY 6/11/20 JS – Phil Fremouw requested by Melissa Philpot 209-333-6370

OPEN PO TAX 8.250%

We Accept VISA MasterCard DISCOVER AMERICAN EXPRESS

P. O. #

TOTAL CHARGES:

GENERATOR'S CERTIFICATION: I hereby declare that the contents of this consignment are fully and accurately described above by proper shipping name and are classified, packed, marked, and labeled, and are in all respects in proper condition for transport by highway according to applicable state and national government regulations. If I am a large quantity generator, I certify that I have a program in place to reduce the volume and toxicity of waste generated to the degree I have determined to be economically practicable and that I have selected the practicable method of treatment, storage, or disposal currently available to me which minimized the present and future threat to human health and the environment; OR, if I am a small quantity generator, I have made a good faith effort to minimize my waste generation and select the best waste management method that is available to me and that I can afford. All used oil from the generator listed above will be transported only to a facility permitted by the State of California to produce used oil into recycled oil **OR** a facility that is required to comply with Federal regulations applicable to the management of used oil. All relevant information regarding known or suspected hazards associated with this waste has been disclosed. The customer agrees to pay reasonable costs and attorney fees incurred in the collection of this obligation. Venue for purposes of this obligation shall be in Solano county. I declare under penalty of perjury that the forgoing is true and correct.

DISPOSAL/RECYCLING FACILITY:	Collection Station	Industrial	Agriculture	Government	Marine	Other	Industrial Oil	Lubricating Oil

6940 Tremont Rd
Dixon, CA 95620
707-448-3700

Melissa Philpot
Print Name

Generator's Signature

Driver's Signature

I hereby certify that I have read and have the authority to bind the above listed generator to the terms on the reverse side of this form.

NCPA

NORTHERN CALIFORNIA POWER AGENCY
DECLARATION OF EXCESS

Date: 7/1/21

	QTY	U/M*	DESCRIPTION (Including All Applicable Model #'s, LCNs & VINs)	COND **	ESTIMATED VALUE UNIT	ESTIMATED VALUE TOTAL	NCPA Property# / Stock # / Fleet # or Project #	SITE LOCATION
1.	1	LOT	EWASTE	S		$ 0.00		CT2/LEC
2.								
3.								
4.								
5.								
6.								
7.								
8.								
9.								

JUSTIFICATION FOR EXCESS/DISPOSAL: E-Waste

RECOMMENDED DISPOSITION: Recycle/Scrap

PREPARED BY: Melissa Philpot / Michael DeBortoli
ORG.
APPROVED BY: _____ **CODE:** _____
(ASST. GEN. MANAGER)
AUTHORIZATION TO PROCEED: _____ **DATE:** 7/8/21
(GENERAL MANAGER)

_____ PUBLIC SALE _____ PRIVATE SALE
X DISPOSAL - NO NET SCRAP VALUE

*U/M = UNIT OF MEASURE

** CONDITION: EXCELLENT (E), GOOD (G), AVERAGE POOR (P), SCRAP (S)

ORIGINAL TO TREASURER-CONTROLLER

FREMOUW ENVIRONMENTAL SERVICES, INC.

Send Payment to:
6940 Tremont Road
Dixon, CA 95620
www.fremouwenvironmental.com

Phone: 800-559-3274
Phone: 707-448-3700
Fax: 707-448-3499

EPA ID # CAR000171017
U.S.D.O.T. # 1484667
D.T.S.C. # 3544
CA # 274461

CSLB A-Eng #1022665
Small Business # 56427

INVOICE # 96100

Date 07/09/21

SITE ADDRESS
Customer NCPA LEC/Stig
12745 N Thornton Rd.
Lodi, CA 95242

BILLING/MAILING ADDRESS
Customer Northern CA Power Agency
ATTN: Northern CA Power Agency
PO Box 1478
Lodi, CA 95242

E.P.A. # CAL 000 443 715

Phone (209) 333-6373

Additional Contacts: # 5300803** Control Room

OPEN PO

PAYMENT TERMS: NET 15

PRODUCT - SERVICE INFORMATION/PROPER SHIPPING DESCRIPTION/BILL OF LADING

7 • 14 • 21 • 30 • 45 • 60 • 90 • 180 • 365 W/C	WASTE CODE	MANIFEST NUMBER	QUANTITY	UNITS	PRICE	AMOUNT
Non-DOT Regulate Electronic Equipment	N/A	96100 1 Pallet		Per Lb.	0.65	
Service Vehicle Stop Fee includes up to 1hr. on Site	N/A			Stop	150.00	150.00
If on Site for more than 1hr., Labor Rates Apply	N/A			Hour	95.00	

SERVICES REQUESTED BY 7/12/21 TTM Phil Fremouw via email from Melissa Philpot

TAX 8.250%

We Accept VISA MasterCard Discover American Express

P. O. #

TOTAL CHARGES: OPEN PO

GENERATOR'S CERTIFICATION: I hereby declare that the contents of this consignment are fully and accurately described above by proper shipping name and are classified, packed, marked, and labeled, and are in all respects in proper condition for transport by highway according to applicable state and national government regulations. If I am a large quantity generator, I certify that I have a program in place to reduce the volume and toxicity of waste generated to the degree I have determined to be economically practicable and that I have selected the practicable method of treatment, storage, or disposal currently available to me which minimized the present and future threat to human health and the environment; OR, if I am a small quantity generator, I have made a good faith effort to minimize my waste generation and select the best waste management method that is available to me and that I can afford. All used oil from the generator listed above will be transported only to a facility permitted by the State of California to produce used oil into recycled oil **OR** a facility that is required to comply with Federal regulations applicable to the management of used oil. All relevant information regarding known or suspected hazards associated with this waste has been disclosed. The customer agrees to pay reasonable costs and attorney fees incurred in the collection of this obligation. Venue for purposes of this obligation shall be in Solano county. I declare under penalty of perjury that the forgoing is true and correct.

DISPOSAL/RECYCLING FACILITY:	Collection Station	Industrial	Agriculture	Government	Marine	Other	Industrial Oil	Lubricating Oil

Fremouw Environmental Services
6940 Tremont Rd.
Dixon, CA 95620
707-448-3700

Melissa Philpot
Print Name

Generator's Signature

Driver's Signature

I hereby certify that I have read and have the authority to bind the above listed generator to the terms on the reverse side of this form.

13

A PUBLIC AGENCY
NCPA
NORTHERN CALIFORNIA POWER AGENCY

Commission Staff Report

COMMISSION MEETING DATE: August 26, 2021

SUBJECT: Debt and Interest Rate Management Report – June 30, 2021

AGENDA CATEGORY: Consent

FROM:	Monty Hanks Assistant General Manager/CFO	**METHOD OF SELECTION:** N/A
Division:	Administrative Services	
Department:	Accounting & Finance	

IMPACTED MEMBERS:

All Members	☒	**City of Lodi**	☐	**City of Shasta Lake**	☐
Alameda Municipal Power	☐	**City of Lompoc**	☐	**City of Ukiah**	☐
San Francisco Bay Area Rapid Transit	☐	**City of Palo Alto**	☐	**Plumas-Sierra REC**	☐
City of Biggs	☐	**City of Redding**	☐	**Port of Oakland**	☐
City of Gridley	☐	**City of Roseville**	☐	**Truckee Donner PUD**	☐
City of Healdsburg	☐	**City of Santa Clara**	☐	**Other**	☐

If other, please specify _____

_____

RECOMMENDATION:

Recommending the Northern California Power Agency (NCPA) Commission accept the Debt and Interest Rate Management Report for the period ending June 30, 2021.

BACKGROUND:

In accordance with the Debt and Interest Rate Management Policy, Section 20, *Monitoring and Reporting Requirements*, approved by the Commission in May 2019, the Finance team will provide a written report regarding the status of all fixed and variable rate debt and the Agency's interest rate swaps on a semi-annual basis to the Finance Committee and to the Commission.

The report, for the period ending June 30, 2021, is attached for your information and acceptance. Listed below is a summary of the report.

Fixed Rate Debt
No changes to the Agency's outstanding, fixed-rate debt since the last report.

Variable Rate Debt
The Agency had a total of $81.48 million of outstanding variable rate debt. The Agency's variable rate debt is structured with a Letter of Credit with Bank of America. On average, the reset rates continue to trade at or better than the Securities Industry and Financial Markets Association (SIFMA) for the Series A bonds. The reset rates and index comparisons are included in the attached report.

Interest Rate Swaps
As of June 30, 2021, NCPA had $81.48 million of an outstanding swap, all related to the Hydroelectric Project bonds, which act as a hedge against the variable rate debt. The total market value of the interest rate swaps was a net liability of $17.3 million (negative). This amount improved from the December 31, 2020 net liability of $20.2 million (negative) due to an increase in the London Inter-bank Offered Rate (LIBOR) swap curve rate. No new swaps or defaults have occurred in the last six months. The interest rate swaps make up approximately 33% of the outstanding Hydroelectric Project debt portfolio. Additional details of the swap agreements are provided in the attached report.

Counterparties
The counterparty for both interest rate swaps is Citibank, N.A. The credit ratings for Citibank, N.A., are A+/Aa3/A+ by S&P, Moody's, and Fitch, respective. There have been no changes since the last report.

Rating Changes
There have been no changes since the last report however the following actions were reported:

- May 2021
    - Fitch affirmed 'A' rating with 'stable' outlook on Lodi Energy Center Revenue Bonds, Issue One.

FISCAL IMPACT:

The total projected savings over the life of the interest rate swaps was $13.9 million at the inception of these agreements. Total projected savings through June 30, 2021 was $8.0 million with actual results at $13.6 million. The difference between expected savings and actual savings is due to "basis risk", or the difference between what NCPA pays on the variable rate bonds and the index rate used in the swap transaction. Total basis risk to date is positive, resulting in additional savings over those expected of $5.6 million. Staff continues to monitor the potential for refinancing these bonds and terminating the swaps, however, the large mark-to-market payment due to Citibank, N.A. of over $17 million (net) is making a potential refund not a feasible option at this time.

ENVIRONMENTAL ANALYSIS:

This activity would not result in a direct or reasonably foreseeable indirect change in the physical environment and is therefore not a "project" for purposes of Section 21065 the California Environmental Quality Act. No environmental review is necessary.

COMMITTEE REVIEW:

Respectfully submitted,

RANDY S. HOWARD
General Manager

Attachments:
- Debt and Interest Rate Management Report as of 6.30.2021

SR: 209:21

A PUBLIC AGENCY
NCPA
NORTHERN CALIFORNIA POWER AGENCY

Debt and Interest Rate Management Report
As of June 30, 2021

Monty Hanks

August 2021

	Page
Key Highlights	3
Debt Overview by Project	
• Geothermal Project	5
• Hydroelectric Project	6-7
• Capital Facilities	8
• Lodi Energy Center	9
Fixed Rate Debt Overview	11
Variable Rate Debt Overview	
• Critical Terms	13
• Performance Versus Indices (fiscal year, inception)	14-15
Interest Rate Swaps Overview	
• Swap Performance	17
• Swap Summary and Valuation	18
• Fair Value by Participant	19
• Fair Value Historical Trend	20

Key Highlights from Jan – June 2021

- No negative material changes to any fixed or variable rate debt or outstanding swap agreements occurred since the last report.
- Ratings on all projects remained the same.
  - Fitch Ratings reviewed the rating of Lodi Energy Center (Indenture A) and, based upon available information, has concluded that there should be no change to the existing rating or rating outlook
- No defaults under the above swap agreements, fixed rate or variable rate debt have occurred.
- Counterparty ratings remained the same; no collateral posting by the counterparty has been required and the counterparty remains highly rated.
- The MTM on the outstanding swaps changed from a negative value of $20.2 million on December 31, 2020 to a negative value of $17.3 million on June 30, 2021.

DEBT OVERVIEW BY PROJECT

Geothermal Project Debt Overview

Geothermal Project Participation Percentages

Member	Entitlement Share (%)	Beneficiary Share (%)
Alameda	16.8825	16.8825
Biggs	0.2270	0.2270
Gridley	0.3950	0.3360
Healdsburg	3.6740	3.6740
Lodi	10.2800	10.2800
Lompoc	3.6810	3.6810
Palo Alto	6.1580	0.0000
Plumas-Sierra	0.8145	0.7010
Roseville	7.8830	7.8830
Santa Clara	44.3905	44.3905
TID	0.0000	6.3305
Ukiah	5.6145	5.6145

Geothermal Project Debt Service

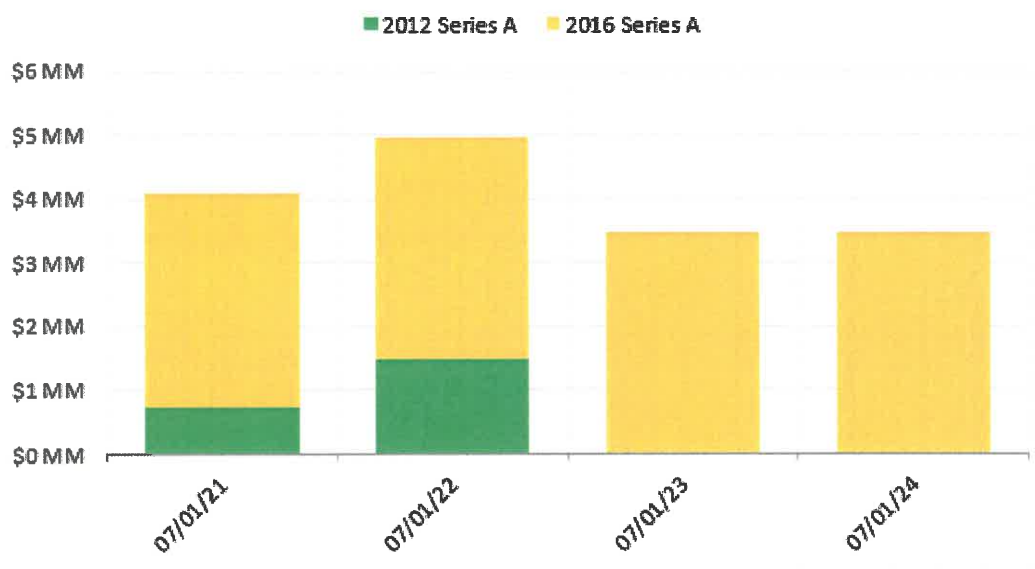

Summary of Outstanding Geothermal Project Debt

Ratings (M/S/F): -/-/-*

Series	Tax Status	Coupon Type	Issue Size	Outstanding Par	Coupon Range	Call Date	Final Maturity
2012 Series A	Tax-Exempt	Fixed-Rate	$12,910,000	$2,165,000	2.289%	7/1/2017	7/1/2022
2016 Series A	Tax-Exempt	Fixed-Rate	$17,530,000	$13,340,000	1.670%	-	7/1/2024

Hydroelectric Project Debt Overview

Hydroelectric Project Participation Percentages

Member	Entitlement Share (%)
Alameda	10.000
Biggs	0.100
Gridley	1.060
Healdsburg	1.660
Lodi	10.370
Lompoc	2.300
Palo Alto	22.920
Roseville	12.000
Santa Clara	35.860
Ukiah	2.040
Plumas-Sierra	1.690

Hydroelectric Project Debt Service

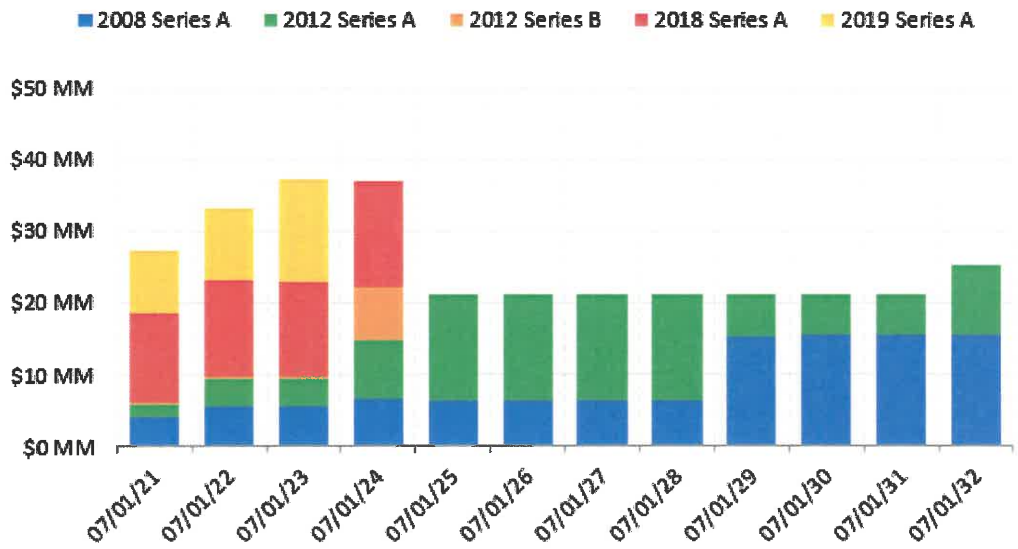

Summary of Outstanding Hydroelectric Project Debt

Ratings (M/S/F): Aa3/-/AA-, Stable Outlooks

Series	Tax Status	Coupon Type	Issue Size	Outstanding Par	Coupon Range	Call Date	Final Maturity
2008 Series A	Tax-Exempt	Variable-Rate	$85,160,000	$81,475,000	Var. (3.819%) [5]	Current	7/1/2032
2012 Series A	Tax-Exempt	Fixed-Rate	$76,665,000	$76,665,000	5.000%	7/1/2022	7/1/2032
2012 Series B	Taxable	Fixed-Rate	$7,120,000	$7,120,000	4.320%	Make-Whole	7/1/2024
2018 Series A	Tax-Exempt	Fixed-Rate	$68,875,000	$49,260,000	5.000%	Non-Callable	7/1/2024
2019 Series A	Tax-Exempt	Fixed-Rate	$39,250,000	$30,480,000	4.000%-5.000%	Non-Callable	7/1/2023

[5] Swapped; Please see next page for details

Hydroelectric Project Debt Overview

Hydroelectric Project Swap Summary									
Series	NCPA Pays	NCPA Receives	Trade Date	Effective Date	Maturity Date	MTM Value *(As of 6/30/21)*	Initial Notional	Current Notional	Bank Counterparty
2008 Series A	3.8190%	54% of USD-LIBOR + 0.54%	11/24/04	11/24/04	7/1/32	($17,279,474)	$85,160,000	$81,475,000	Citibank, N.A., New York (Aa3/A+/A+)

Hydroelectric Project Liquidity Summary			
Series	LOC Provider	LOC Expiry	Reset (as of 7/13/21)
2008 Series A	Bank of America, N.A. (Aa2/A+/AA)	June 21, 2024	0.01%

Breakdown of Hydroelectric Project Debt Type

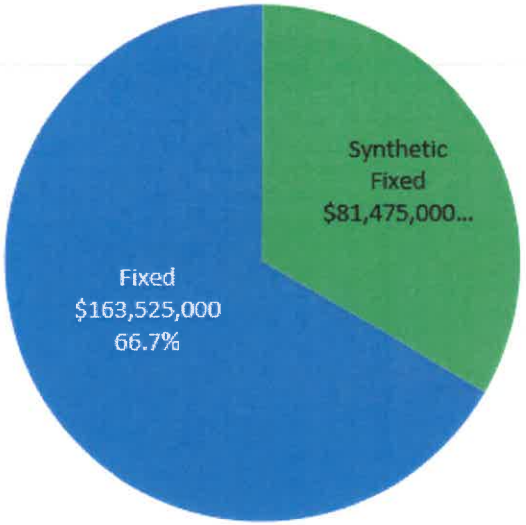

Capital Facilities Debt Overview

Capital Facilities Participation Percentages

Member	Entitlement Share (%)
Alameda	19.00
Lodi	39.50
Lompoc	5.00
Roseville	36.50

Capital Facilities Debt Service

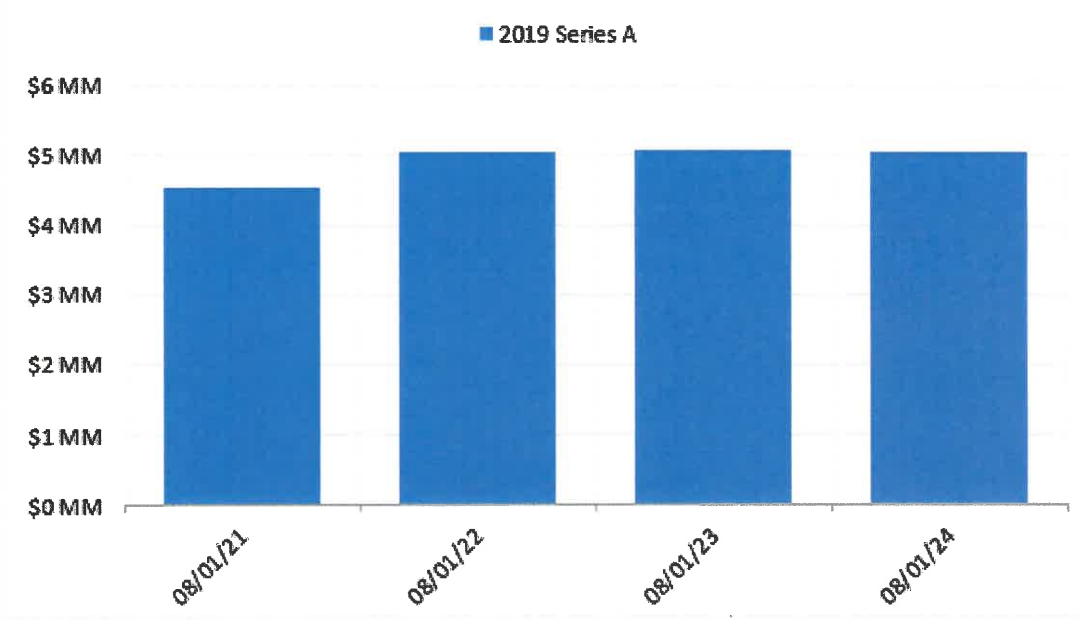

Summary of Outstanding Capital Facilities Debt

Ratings (M/S/F): A1/-/- , Stable Outlooks

Series	Tax Status	Coupon Type	Issue Size	Outstanding Par	Coupon Range	Call Date	Final Maturity
2019 Series A	Tax-Exempt	Fixed-Rate	$20,450,000	$17,875,000	5.000%	-	8/1/2024

Lodi Energy Center Debt Overview

LEC Participation Percentages

Member	Entitlement Share (%)	Ind. Group A Cost Share (%)
CDWR	33.5000	-
Azusa	2.7857	4.9936
Biggs	0.2679	0.4802
Gridley	1.9643	3.5212
Healdsburg	1.6428	2.9448
Lodi	9.5000	17.0295
Lompoc	2.0357	3.6491
Santa Clara	25.7500	46.1588
Ukiah	1.7857	3.2010
MID	10.7143	-
Plumas-Sierra	0.7857	1.4084
PWRPA	2.6679	4.7824
SFBART	6.6000	11.8310

Lodi Energy Center Debt Service

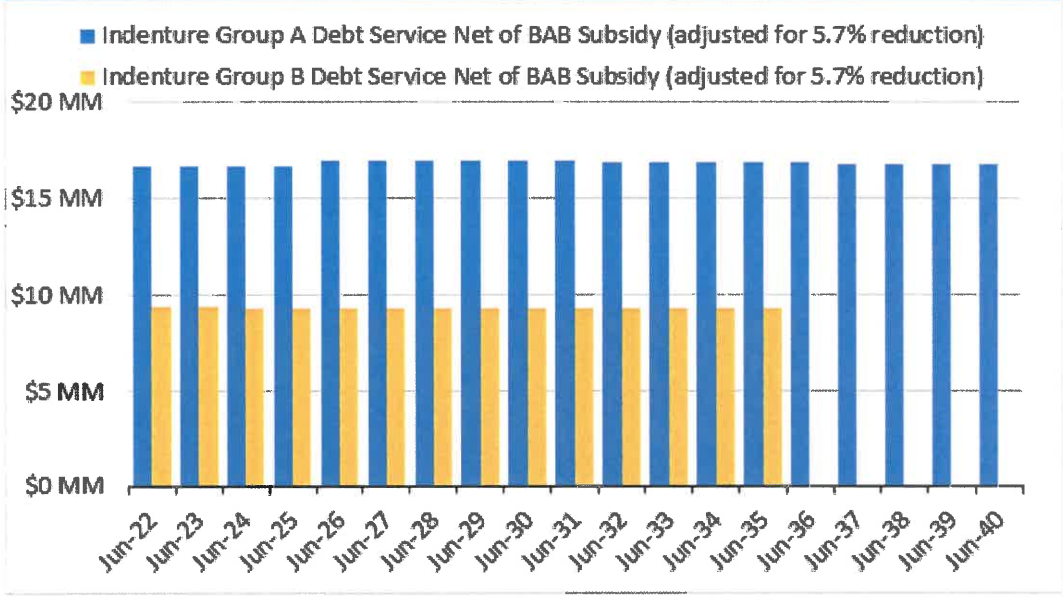

Summary of Outstanding Lodi Energy Center Debt

Series	Tax Status	Coupon Type	Issue Size	Outstanding Par	Coupon Range	Next Call	Final Maturity
Indenture Group A | Ratings (M/S/F): A1/A-/A, Stable Outlooks							
2010 Series B	Taxable BABs	Fixed-Rate	$176,625,000	$176,625,000	7.311% (T)	Make-Whole	6/1/2040
2017 Series A	Tax-Exempt	Fixed-Rate	$38,970,000	$30,260,000	2.270%	-	6/1/2025
Indenture Group B—CADWR | Ratings (M/SF): Aa2/AAA/- , Stable Outlooks							
2010 Series B	Taxable BABs	Fixed-Rate	$110,225,000	$99,650,000	4.630%-5.679% (T)	Make-Whole	6/1/2035

(T) Taxable Build America Bonds; Interest rate gross of BAB subsidy

FIXED RATE DEBT OVERVIEW

Fixed Rate Debt Overview

- Fixed Rate Debt
  - No changes since last update
- Ratings
  - May 2021
    - Fitch Ratings reviewed the rating of the Lodi Energy Center and based upon available information, has concluded that there should be no change to the existing rating or rating outlook
    - The ratings remain at "A" with a stable outlook [Indenture Group A]

VARIABLE RATE DEBT OVERVIEW

Variable Rate Debt Overview

	Hydro 2008A
Variable Rate Debt	
Amount	$81,475,000
Priced	Weekly
Payment	Monthly
Swap Counter-party:	Citigroup
Payments	NCPA Pays Fixed @ 3.819%
From/To: Counterparty	NCPA Receives Floating rate (based on 54% of monthly Libor+.54%)
Payment terms:	
NCPA	Semi-Annual (net)
Counterparty	Semi-Annual (net)
Liquidity/Letter of Credit Provider	Bank of America
Annual Fee	35.0 bp
Expiration Date	6/21/2024
Credit Ratings	Aa2/A+/AA-

Variable Rate Debt Overview

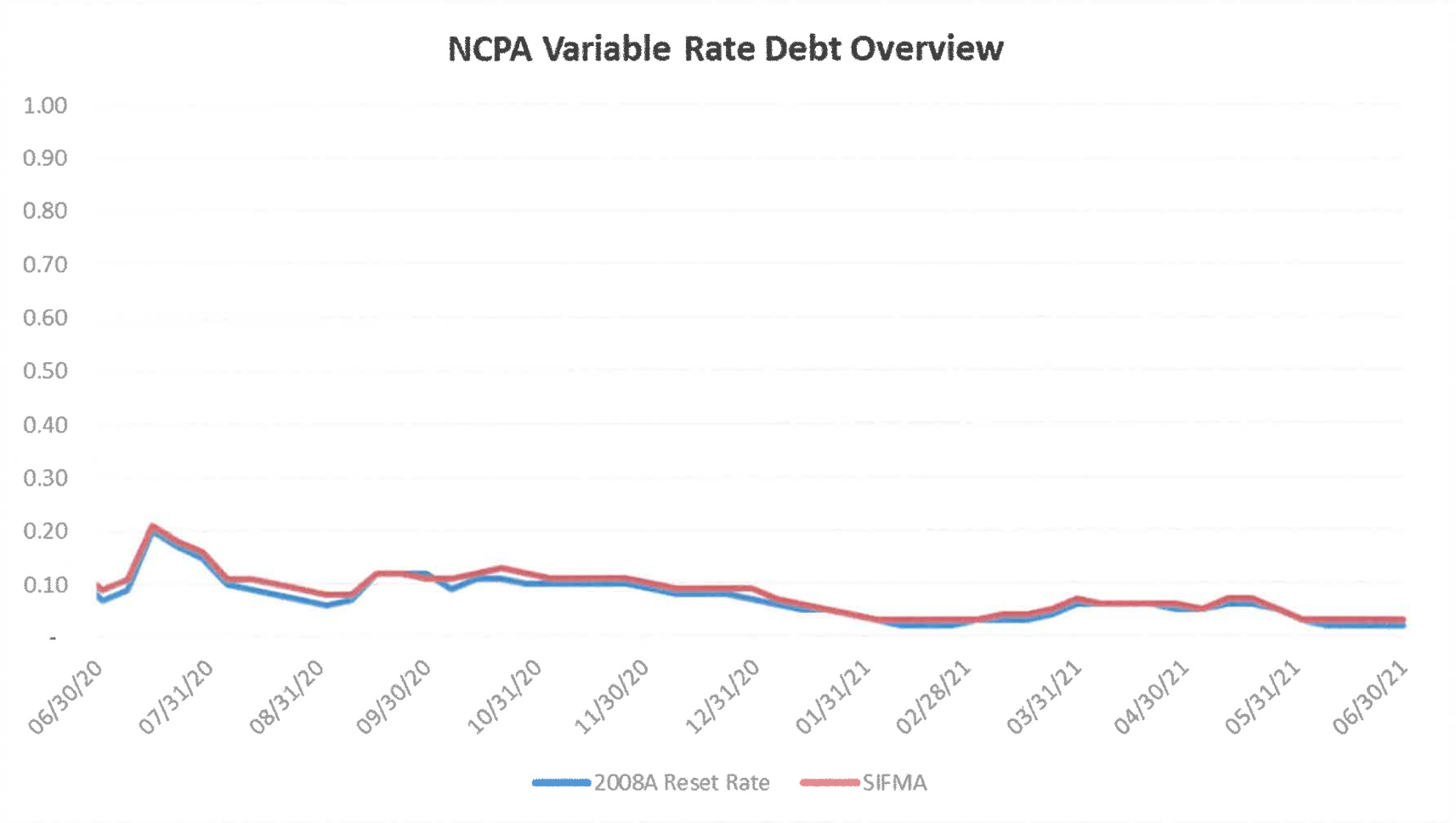

Variable Rate Debt Overview

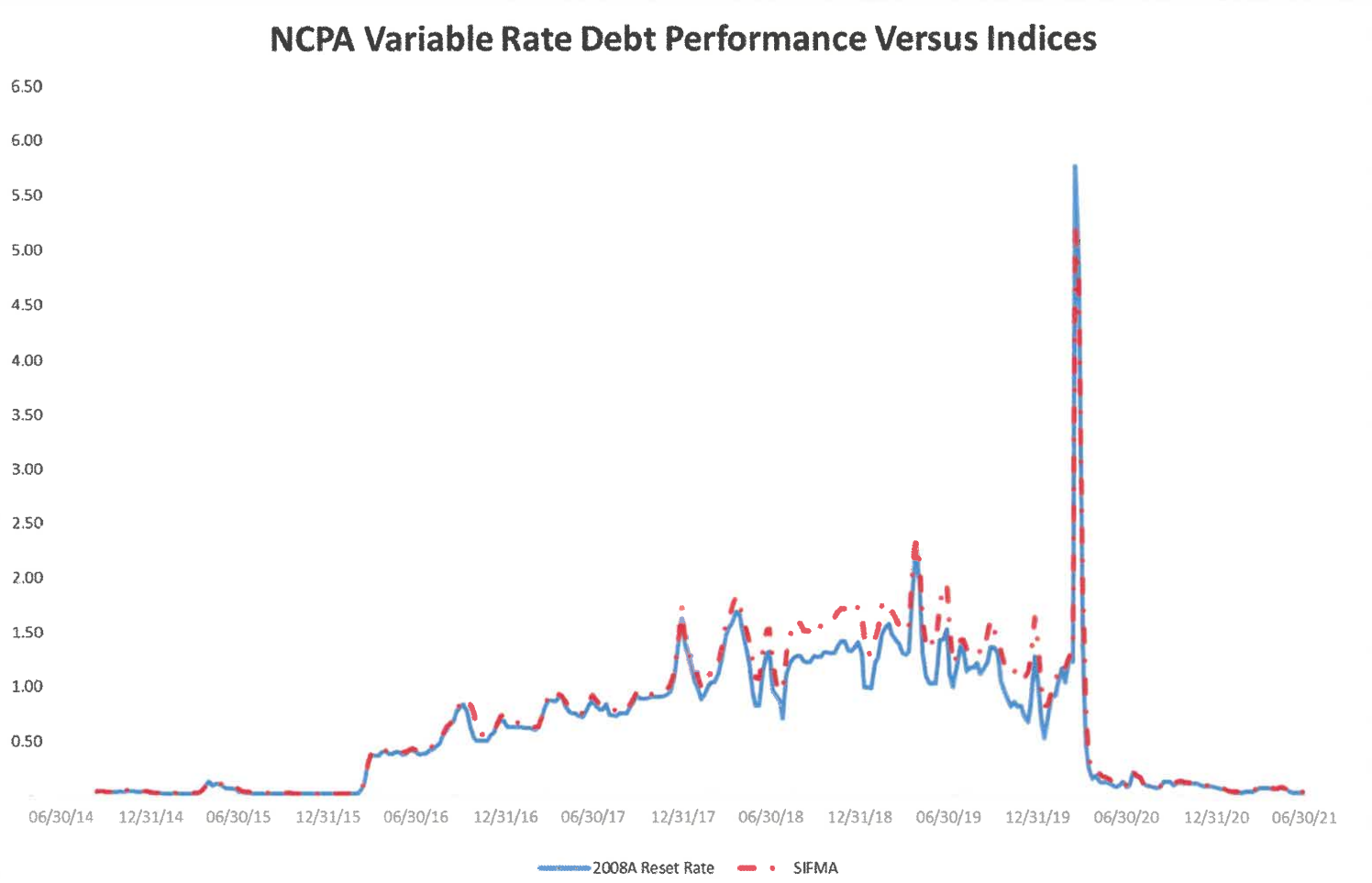

INTEREST RATE SWAP OVERVIEW

Interest Rate Swap Overview

Northern California Power Agency
Hydroelectric Project Swaps Performance to Date
June 30, 2021

Total Projected Savings over life of bonds: $13.9 million
Total Projected Savings to date: $8.0 million
Actual Savings to date: $13.6 million

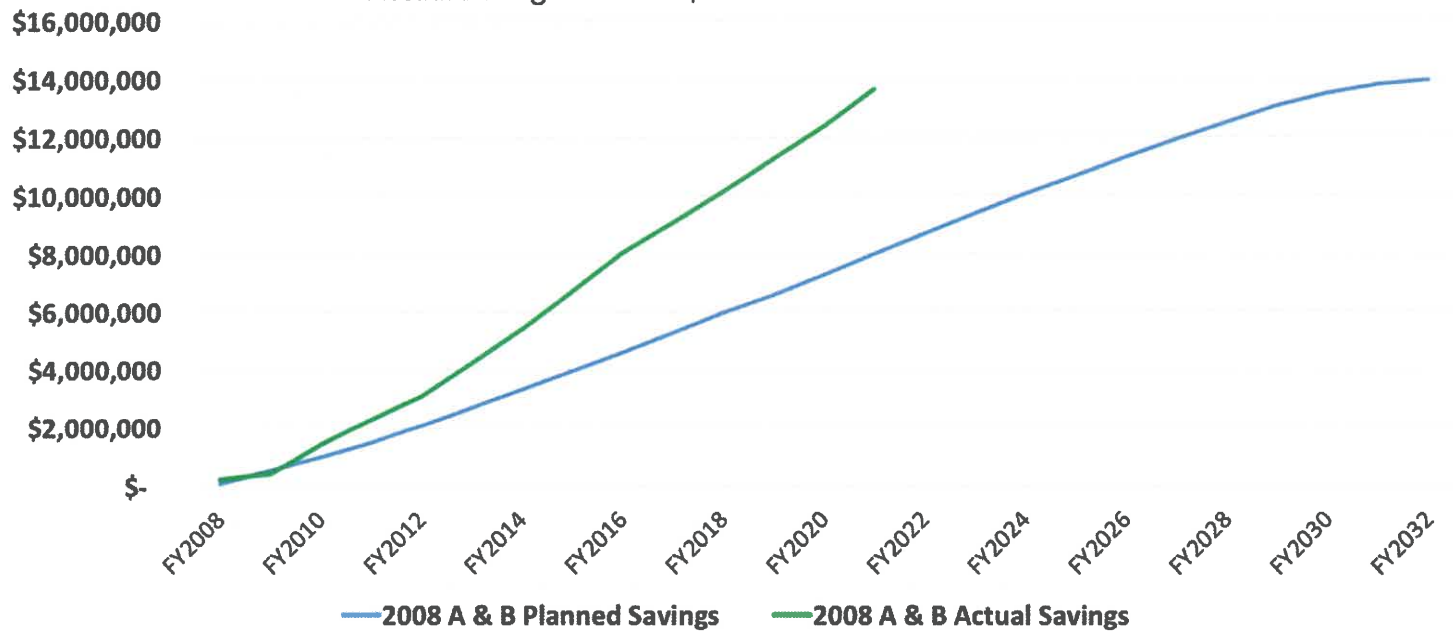

Interest Rate Swap Overview

pfm
PFM Swap Advisors LLC

Phone: 215 567-6100
Fax: 215 567-4180

Transaction Type	Name	Associated Bonds	Client Pay	Client Receives	Trade Date	Effective Date (Initial Calc)	Maturity Date
Swap	NCPA 200411240001	Series 2008A	3.8190%	54% of USD-LIBOR + 0.54%	11/24/2004	4/2/2008	7/1/2032

Initial Notional	Current Notional	Bank Counterparty	Counterparty Ratings Moody's / S&P / Fitch	MTM Value 6/30/2021
$85,160,000	$81,475,000	Citibank, N.A., New York	Aa3 / A+ / A+	($17,279,474)

Interest Rate Swap Overview – Participant

pfm
PFM Swap Advisors LLC
Phone: 215 567-6100
Fax: 215 567-4180

Transaction Type	Name	Associated Bonds	Client Pay	Client Receives	Trade Date	Maturity Date	Current Notional
Swap	NCPA 200411240001	Series 2008A	3.8190%	54% of USD-LIBOR + 0.54%	11/24/2004	7/1/2032	$81,475,000
							$81,475,000

Total MTM Value	Alameda 10%	Healdsburg 1.66%	Lodi 10.37%	Lompoc 2.30%	Palo Alto 22.92%	Plumas-Sierra 1.69%	Roseville 12.00%	Santa Clara 37.02%	Ukiah 2.04%
($17,279,474)	($1,727,947)	($286,839)	($1,791,881)	($397,428)	($3,960,455)	($292,023)	($2,073,537)	($6,396,861)	($352,501)

Interest Rate Swap Overview

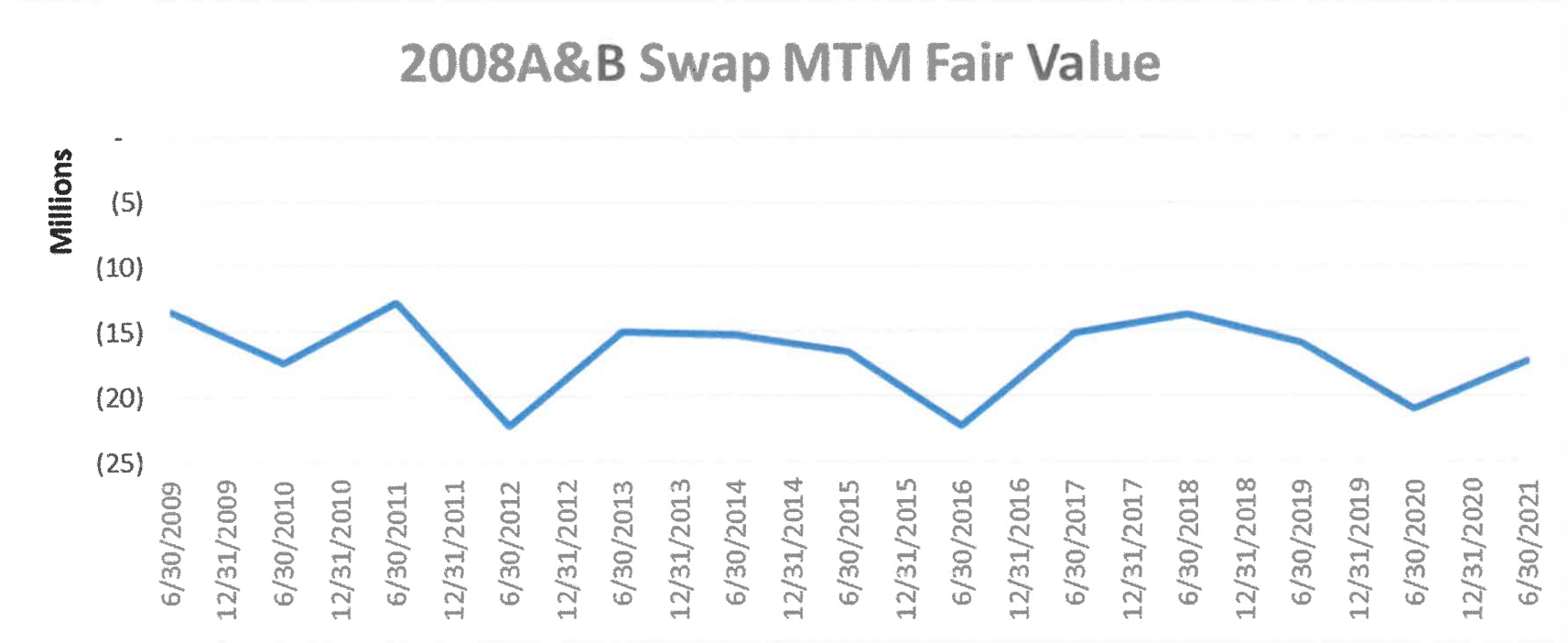

14

Commission Staff Report

COMMISSION MEETING DATE: August 26, 2021

SUBJECT: Hart High Voltage Apparatus Repair & Testing Co., Inc. – Five Year Multi-Task General Services Agreement for Specialized Electrical Maintenance Services; Applicable to the following: All Northern California Power Agency (NCPA) Facilities, NCPA Members, Southern California Public Power Authority (SCPPA), and SCPPA Members

AGENDA CATEGORY: Consent

FROM:	Joel Ledesma Assistant General Manager	**METHOD OF SELECTION:** *N/A*
Division:	Generation Services	*If other, please describe:*
Department:	Combustion Turbines	

IMPACTED MEMBERS:

All Members	☒	**City of Lodi**	☐	**City of Shasta Lake**	☐
Alameda Municipal Power	☐	**City of Lompoc**	☐	**City of Ukiah**	☐
San Francisco Bay Area Rapid Transit	☐	**City of Palo Alto**	☐	**Plumas-Sierra REC**	☐
City of Biggs	☐	**City of Redding**	☐	**Port of Oakland**	☐
City of Gridley	☐	**City of Roseville**	☐	**Truckee Donner PUD**	☐
City of Healdsburg	☐	**City of Santa Clara**	☐	**Other**	☐

If other, please specify _____

_____

RECOMMENDATION:

Approve Resolution 21-77 authorizing the General Manager or his designee to enter into a Multi-Task General Services Agreement with Hart High Voltage Apparatus Repair & Testing Co., Inc. for specialized electrical maintenance services, with any non-substantial changes recommended and approved by the NCPA General Counsel, which shall not exceed $3,000,000 over five years, for use at any facilities owned and/or operated by NCPA, NCPA Members, by SCPPA, and SCPPA Members.

BACKGROUND:

Specialized electrical maintenance services are required from time to time for the operation and maintenance of facilities owned and/or operated by NCPA, NCPA Members, by SCPPA, and SCPPA Members. The current agreement with Hart High Voltage Apparatus Repair & Testing Co., Inc. is expiring. NCPA has utilized this vendor in the past, and has a good working relationship with this vendor. NCPA desires to enter into this agreement so established terms and conditions are in place should this vendor be the successful bidder on future projects. NCPA has agreements in place for similar services with Eaton Corporation, Electrical Maintenance Consultants, Inc. and Gannett Fleming, Inc.

FISCAL IMPACT:

Upon execution, the total cost of the agreement is not to exceed $3,000,000 over five years. Purchase orders referencing the terms and conditions of the agreement will be issued following NCPA procurement policies and procedures.

SELECTION PROCESS:

This enabling agreement does not commit NCPA to any expenditure of funds. At the time services are needed, NCPA will bid the specific scope of work consistent with NCPA procurement policies and procedures. NCPA seeks bids from qualified providers as required. Bids are awarded to the vendor providing the best overall value to NCPA. NCPA will issue purchase orders based on cost and availability of the services needed at the time the service is required.

ENVIRONMENTAL ANALYSIS:

This activity would not result in a direct or reasonably foreseeable indirect change in the physical environment and is therefore not a "project" for purposes of Section 21065 the California Environmental Quality Act. No environmental review is necessary.

COMMITTEE REVIEW:

On August 4, 2021 the Facilities Committee reviewed and endorsed the recommendation above for Commission approval.

On August 9, 2021 the Lodi Energy Center Project Participant Committee reviewed and approved the recommendation above for Commission approval.

Respectfully submitted,

RANDY S. HOWARD
General Manager

Attachments (2):

- Resolution 21-77
- Multi-Task General Services Agreement with Hart High Voltage Apparatus Repair & Testing Co., Inc.

SR: 199:21

RESOLUTION 21-77

RESOLUTION OF THE NORTHERN CALIFORNIA POWER AGENCY APPROVING A MULTI-TASK GENERAL SERVICES AGREEMENT WITH HART HIGH VOLTAGE APPARATUS REPAIR & TESTING CO., INC.

(reference Staff Report #199:21)

WHEREAS, specialized electrical maintenance services are required from time to time for the operation and maintenance of facilities owned and/or operated by the Northern California Power Agency (NCPA), NCPA Members, by the Southern California Public Power Authority (SCPPA), and SCPPA Members; and

WHEREAS, Hart High Voltage Apparatus Repair & Testing Co., Inc. is a provider of these services; and

WHEREAS, the NCPA Commission has reviewed the Multi-Task General Services Agreement with Hart High Voltage Apparatus Repair & Testing Co., Inc. to provide such services as needed at any facilities owned and/or operated by NCPA, NCPA Members, by SCPPA, and SCPPA Members; and

WHEREAS, this activity would not result in a direct or reasonably foreseeable indirect change in the physical environment and is therefore not a "project" for purposes of Section 21065 the California Environmental Quality Act. No environmental review is necessary; and

NOW, THEREFORE BE IT RESOLVED, that the Commission of the Northern California Power Agency authorizes the General Manager or his designee to enter into said Agreement, with any non-substantial changes as approved by the NCPA General Counsel, which shall not exceed $3,000,000 over five years, for use at any facilities owned and/or operated by NCPA, NCPA Members, by SCPPA, and SCPPA Members.

PASSED, ADOPTED and APPROVED this ____ day of _____, 2021 by the following vote on roll call:

	Vote	Abstained	Absent
Alameda			
San Francisco BART			
Biggs			
Gridley			
Healdsburg			
Lodi			
Lompoc			
Palo Alto			
Port of Oakland			
Redding			
Roseville			
Santa Clara			
Shasta Lake			
Truckee Donner			
Ukiah			
Plumas-Sierra			

DAVID HAGELE
CHAIR

ATTEST: CARY A. PADGETT
ASSISTANT SECRETARY

MULTI-TASK
GENERAL SERVICES AGREEMENT BETWEEN
THE NORTHERN CALIFORNIA POWER AGENCY AND
HART HIGH VOLTAGE APPARATUS REPAIR AND TESTING CO., INC.

This Multi-Task General Services Agreement ("Agreement') is made by and between the Northern California Power Agency, a joint powers agency with its main office located at 651 Commerce Drive, Roseville, CA 95678-6420 ("Agency") and Hart High Voltage Apparatus Repair & Testing Co., Inc., a corporation with its office located at 1612 Poole Blvd., Yuba City, CA 95993 ("Contractor") (together sometimes referred to as the "Parties") as of _____, 2021 ("Effective Date") in Roseville, California.

Section 1. SCOPE OF WORK. Subject to the terms and conditions set forth in this Agreement, Contractor is willing to provide to Agency the range of services and/or goods described in the Scope of Work attached hereto as Exhibit A and incorporated herein ("Work").

1.1 **Term of Agreement.** The term of this Agreement shall begin on the Effective Date and shall end when Contractor completes the Work, or no later than five (5) years from the date this Agreement was signed by Agency, whichever is shorter.

1.2 **Standard of Performance.** Contractor shall perform the Work in the manner and according to the standards observed by a competent practitioner of the profession in which Contractor is engaged and for which Contractor is providing the Work. Contractor represents that it is licensed, qualified and experienced to provide the Work set forth herein.

1.3 **Assignment of Personnel.** Contractor shall assign only competent personnel to perform the Work. In the event that Agency, in its sole discretion, at any time during the term of this Agreement, requests the reassignment of any such personnel, Contractor shall, immediately upon receiving written notice from Agency of such request, reassign such personnel.

1.4 **Work Provided.** Work provided under this Agreement by Contractor may include Work directly to the Agency or, as requested by the Agency and consistent with the terms of this Agreement, to Agency members, Southern California Public Power Authority ("SCPPA") or SCPPA members.

1.5 **Request for Work to be Performed.** At such time that Agency determines to have Contractor perform Work under this Agreement, Agency shall issue a Purchase Order. The Purchase Order shall identify the specific Work to be performed ("Requested Work"), may include a not-to-exceed cap on monetary cap on Requested Work and all related expenditures authorized by that Purchase Order, and shall include a time by which the Requested Work shall be completed. Contractor shall have seven calendar days from the date of the Agency's issuance of the Purchase Order in which to respond in writing that Contractor chooses not to perform the Requested Work. If Contractor agrees to perform the Requested Work, begins to perform the Requested Work, or does not respond within the seven day period specified, then Contractor will have

agreed to perform the Requested Work on the terms set forth in the Purchase Order, this Agreement and its Exhibits.

Section 2. COMPENSATION. Agency hereby agrees to pay Contractor an amount **NOT TO EXCEED** THREE MILLION dollars ($3,000,000.00) for the Work, which shall include all fees, costs, expenses and other reimbursables, as set forth in Contractor's fee schedule, attached hereto and incorporated herein as Exhibit B. This dollar amount is not a guarantee that Agency will pay that full amount to the Contractor, but is merely a limit of potential Agency expenditures under this Agreement.

2.1 Invoices. Contractor shall submit invoices, not more often than once a month during the term of this Agreement, based on the cost for services performed and reimbursable costs incurred prior to the invoice date. Invoices shall contain the following information:

- The beginning and ending dates of the billing period;
- Work performed;
- The Purchase Order number authorizing the Requested Work;
- At Agency's option, for each work item in each task, a copy of the applicable time entries or time sheets shall be submitted showing the name of the person doing the work, the hours spent by each person, a brief description of the work, and each reimbursable expense, with supporting documentation, to Agency's reasonable satisfaction;
- At Agency's option, the total number of hours of work performed under the Agreement by Contractor and each employee, agent, and subcontractor of Contractor performing work hereunder.

Invoices shall be sent to:

Northern California Power Agency
651 Commerce Drive
Roseville, California 95678
Attn: Accounts Payable
AcctsPayable@ncpa.com

2.2 Monthly Payment. Agency shall make monthly payments, based on invoices received, for Work satisfactorily performed, and for authorized reimbursable costs incurred. Agency shall have thirty (30) days from the receipt of an invoice that complies with all of the requirements above to pay Contractor.

2.3 Payment of Taxes. Contractor is solely responsible for the payment of all federal, state and local taxes, including employment taxes, incurred under this Agreement.

2.4 Authorization to Perform Work. The Contractor is not authorized to perform any Work or incur any costs whatsoever under the terms of this Agreement until receipt of a Purchase Order from the Contract Administrator.

2.5 **Timing for Submittal of Final Invoice.** Contractor shall have ninety (90) days after completion of the Requested Work to submit its final invoice for the Requested Work. In the event Contractor fails to submit an invoice to Agency for any amounts due within the ninety (90) day period, Contractor is deemed to have waived its right to collect its final payment for the Requested Work from Agency.

Section 3. FACILITIES AND EQUIPMENT. Except as set forth herein, Contractor shall, at its sole cost and expense, provide all facilities and equipment that may be necessary to perform the Work.

Section 4. INSURANCE REQUIREMENTS. Before beginning any Work under this Agreement, Contractor, at its own cost and expense, shall procure the types and amounts of insurance listed below and shall maintain the types and amounts of insurance listed below for the period covered by this Agreement.

4.1 **Workers' Compensation.** If Contractor employs any person, Contractor shall maintain Statutory Workers' Compensation Insurance and Employer's Liability Insurance for any and all persons employed directly or indirectly by Contractor with limits of not less than one million dollars ($1,000,000.00) per accident.

4.2 **Commercial General and Automobile Liability Insurance.**

4.2.1 **Commercial General Insurance.** Contractor shall maintain commercial general liability insurance for the term of this Agreement, including products liability, covering any loss or liability, including the cost of defense of any action, for bodily injury, death, personal injury and broad form property damage which may arise out of the operations of Contractor. The policy shall provide a minimum limit of $2,000,000 per occurrence/$2,000,000 aggregate. Commercial general coverage shall be at least as broad as ISO Commercial General Liability form CG 0001 (current edition) on "an occurrence" basis covering comprehensive General Liability, with a self-insured retention or deductible of no more than $100,000. No endorsement shall be attached limiting the coverage.

4.2.2 **Automobile Liability.** Contractor shall maintain automobile liability insurance form CA 0001 (current edition) for the term of this Agreement covering any loss or liability, including the cost of defense of any action, arising from the operation, maintenance or use of any vehicle (symbol 1), whether or not owned by the Contractor, on or off Agency premises. The policy shall provide a minimum limit of $2,000,000 per each accident, with a self-insured retention or deductible of no more than $100,000. This insurance shall provide contractual liability covering all motor vehicles and mobile equipment to the extent coverage may be excluded from general liability insurance.

4.2.3 **General Liability/Umbrella Insurance.** The coverage amounts set forth above may be met by a combination of underlying and umbrella policies as long as in combination the limits equal or exceed those stated.

4.3 Professional Liability Insurance. Not Applicable.

4.4 Pollution Insurance. Not Applicable.

4.5 All Policies Requirements.

4.5.1 Verification of coverage. Prior to beginning any work under this Agreement, Contractor shall provide Agency with (1) a Certificate of Insurance that demonstrates compliance with all applicable insurance provisions contained herein and (2) policy endorsements to the policies referenced in Section 4.2 and in Section 4.4, if applicable, adding the Agency as an additional insured and declaring such insurance primary in regard to work performed pursuant to this Agreement.

4.5.2 Notice of Reduction in or Cancellation of Coverage. Contractor shall provide at least thirty (30) days prior written notice to Agency of any reduction in scope or amount, cancellation, or modification adverse to Agency of the policies referenced in Section 4.

4.5.3 Higher Limits. If Contractor maintains higher limits than the minimums specified herein, the Agency shall be entitled to coverage for the higher limits maintained by the Contractor.

4.5.4 Additional Certificates and Endorsements. If Contractor performs Work for Agency members, SCPPA and/or SCPPA members pursuant to this Agreement, Contractor shall provide the certificates of insurance and policy endorsements, as referenced in Section 4.5.1, naming the specific Agency member, SCPPA and/or SCPPA member for which the Work is to be performed.

4.5.5 Waiver of Subrogation. Contractor agrees to waive subrogation which any insurer of Contractor may acquire from Contractor by virtue of the payment of any loss. Contractor agrees to obtain any endorsement that may be necessary to effect this waiver of subrogation. In addition, the Workers' Compensation policy shall be endorsed with a waiver of subrogation in favor of Agency for all work performed by Contractor, its employees, agents and subcontractors.

4.6 Contractor's Obligation. Contractor shall be solely responsible for ensuring that all equipment, vehicles and other items utilized in the performance of Work are operated, provided or otherwise utilized in a manner that ensures they are and remain covered by the policies referenced in Section 4 during this Agreement. Contractor shall also ensure that all workers involved in the provision of Work are properly classified as employees, agents or independent contractors and are and remain covered by any and all workers' compensation insurance required by applicable law during this Agreement.

Section 5. INDEMNIFICATION AND CONTRACTOR'S RESPONSIBILITIES.

5.1 **Effect of Insurance.** Agency's acceptance of insurance certificates and endorsements required under this Agreement does not relieve Contractor from liability under this indemnification and hold harmless clause. This indemnification and hold harmless clause shall apply to any damages or claims for damages whether or not such insurance policies shall have been determined to apply. By execution of this Agreement, Contractor acknowledges and agrees to the provisions of this section and that it is a material element of consideration.

5.2 **Scope.** Contractor shall indemnify, defend with counsel reasonably acceptable to the Agency, and hold harmless the Agency, and its officials, commissioners, officers, employees, agents and volunteers from and against all losses, liabilities, claims, demands, suits, actions, damages, expenses, penalties, fines, costs (including without limitation costs and fees of litigation), judgments and causes of action of every nature arising out of or in connection with any acts or omissions by Contractor, its officers, officials, agents, and employees, except as caused by the sole or gross negligence of Agency. Notwithstanding, should this Agreement be construed as a construction agreement under Civil Code section 2783, then the exception referenced above shall also be for the active negligence of Agency.

5.3 **Transfer of Title.** Not Applicable.

Section 6. STATUS OF CONTRACTOR.

6.1 **Independent Contractor.** Contractor is an independent contractor and not an employee of Agency. Agency shall have the right to control Contractor only insofar as the results of Contractor's Work and assignment of personnel pursuant to Section 1; otherwise, Agency shall not have the right to control the means by which Contractor accomplishes Work rendered pursuant to this Agreement. Notwithstanding any other Agency, state, or federal policy, rule, regulation, law, or ordinance to the contrary, Contractor and any of its employees, agents, and subcontractors providing services under this Agreement shall not qualify for or become entitled to, and hereby agree to waive any and all claims to, any compensation, benefit, or any incident of employment by Agency, including but not limited to eligibility to enroll in the California Public Employees Retirement System (PERS) as an employee of Agency and entitlement to any contribution to be paid by Agency for employer contributions and/or employee contributions for PERS benefits.

Contractor shall indemnify, defend, and hold harmless Agency for the payment of any employee and/or employer contributions for PERS benefits on behalf of Contractor or its employees, agents, or subcontractors, as well as for the payment of any penalties and interest on such contributions, which would otherwise be the responsibility of Agency. Contractor and Agency acknowledge and agree that compensation paid by Agency to Contractor under this Agreement is based upon Contractor's estimated costs of providing the Work, including salaries and benefits of employees, agents and subcontractors of Contractor.

Contractor shall indemnify, defend, and hold harmless Agency from any lawsuit, administrative action, or other claim for penalties, losses, costs, damages, expense and liability of every kind, nature and description that arise out of, pertain to, or relate to such claims, whether directly or indirectly, due to Contractor's failure to secure workers' compensation insurance for its employees, agents, or subcontractors.

Contractor agrees that it is responsible for the provision of group healthcare benefits to its fulltime employees under 26 U.S.C. § 4980H of the Affordable Care Act. To the extent permitted by law, Contractor shall indemnify, defend and hold harmless Agency from any penalty issued to Agency under the Affordable Care Act resulting from the performance of the Services by any employee, agent, or subcontractor of Contractor.

6.2 **Contractor Not Agent.** Except as Agency may specify in writing, Contractor shall have no authority, express or implied, to act on behalf of Agency in any capacity whatsoever as an agent. Contractor shall have no authority, express or implied, pursuant to this Agreement to bind Agency to any obligation whatsoever.

6.3 **Assignment and Subcontracting.** This Agreement contemplates personal performance by Contractor and is based upon a determination of Contractor's unique professional competence, experience, and specialized professional knowledge. A substantial inducement to Agency for entering into this Agreement was and is the personal reputation and competence of Contractor. Contractor may not assign this Agreement or any interest therein without the prior written approval of the Agency. Contractor shall not subcontract any portion of the performance contemplated and provided for herein, other than to the subcontractors identified in Exhibit A, without prior written approval of the Agency. Where written approval is granted by the Agency, Contractor shall supervise all work subcontracted by Contractor in performing the Work and shall be responsible for all work performed by a subcontractor as if Contractor itself had performed such work. The subcontracting of any work to subcontractors shall not relieve Contractor from any of its obligations under this Agreement with respect to the Work and Contractor is obligated to ensure that any and all subcontractors performing any Work shall be fully insured in all respects and to the same extent as set forth under Section 4, to Agency's satisfaction.

6.4 **Certification as to California Energy Commission.** If requested by the Agency, Contractor shall, at the same time it executes this Agreement, execute Exhibit C.

6.5 **Certification as to California Energy Commission Regarding Hazardous Materials Transport Vendors.** If requested by the Agency, Contractor shall, at the same time it executes this Agreement, execute Exhibit D.

6.6 **Maintenance Labor Agreement.** If the Work is subject to the terms of one or more Maintenance Labor Agreements, which are applicable only to certain types

of construction, repair and/or maintenance projects, then Contractor shall execute Exhibit E and/or similar documentation as to compliance.

Section 7. LEGAL REQUIREMENTS.

7.1 Governing Law. The laws of the State of California shall govern this Agreement.

7.2 Compliance with Applicable Laws. Contractor and its subcontractors and agents, if any, shall comply with all laws applicable to the performance of the work hereunder.

7.3 Licenses and Permits. Contractor represents and warrants to Agency that Contractor and its employees, agents, and subcontractors (if any) have and will maintain at their sole expense during the term of this Agreement all licenses, permits, qualifications, and approvals of whatever nature that are legally required to practice their respective professions.

7.4 Monitoring by DIR. The Work is subject to compliance monitoring and enforcement by the Department of Industrial Relations.

7.5 Registration with DIR. During the term of this Agreement, Contractor warrants that it is registered with the Department of Industrial Relations and qualified to perform Work consistent with Labor Code section 1725.5.

7.6 Prevailing Wage Rates. In accordance with California Labor Code Section 1771, not less than the general prevailing rate of per diem wages for work of a similar character in the locality in which the Work is to be performed, and not less than the general prevailing rate of per diem wages for holiday and overtime work as provided in the California Labor Code must be paid to all workers engaged in performing the Work. In accordance with California Labor Code Section 1770 and following, the Director of Industrial Relations has determined the general prevailing wage per diem rates for the locality in which the Work is to be performed; the Agency has obtained the general prevailing rate of per diem wages and the general rate for holiday and overtime work in the locality in which the Work is to be performed for each craft, classification or type of worker needed to perform the project; and copies of the prevailing rate of per diem wages are on file at the Agency and will be made available on request. Throughout the performance of the Work, Contractor must comply with all applicable laws and regulations that apply to wages earned in performance of the Work. Contractor assumes all responsibility for such payments and shall defend, indemnify and hold the Agency harmless from any and all claims made by the State of California, the Department of Industrial Relations, any subcontractor, any worker or any other third party with regard thereto.

Additionally, in accordance with the California Administrative Code, Title 8, Group 3, Article 2, Section 16000, Publication of Prevailing Wage Rates by Awarding

Bodies, copies of the applicable determination of the Director can be found on the web at: http://www.dir.ca.gov/DLSR/PWD/ and may be reviewed at any time.

Contractor shall provide a certified copy of its payroll, on forms to be determined by the Agency and consistent with the Labor Code, within ten (10) days of the Contractor's receipt of Agency's written request therefor. Contractor's failure to timely comply with this provision may subject the Contractor to penalties pursuant to state law.

Contractor shall comply with applicable law, including Labor Code Sections 1774 and 1775. In accordance with Section 1775, Contractor shall forfeit as a penalty to Agency $200.00 for each calendar day or portion thereof, for each worker paid less than the prevailing rates as determined by the Director of Industrial Relations for such work or craft in which such worker is employed for any Work done under the Agreement by Contractor or by any subcontractor under Contractor in violation of the provisions of the Labor Code and in particular, Labor Code Sections 1770 *et seq.* In addition to the penalty and pursuant to Section 1775, the difference between such prevailing wage rates and the amount paid to each worker for each calendar day or portion thereof for which each worker was paid less than the prevailing wage rate shall be paid to each worker by the Contractor.

Section 8. TERMINATION AND MODIFICATION.

8.1 Termination. Agency may cancel this Agreement at any time and without cause upon ten (10) days prior written notice to Contractor.

In the event of termination, Contractor shall be entitled to compensation for Work satisfactorily completed as of the effective date of termination; Agency, however, may condition payment of such compensation upon Contractor delivering to Agency any or all records or documents (as referenced in Section 9.1 hereof).

8.2 Amendments. The Parties may amend this Agreement only by a writing signed by both of the Parties.

8.3 Survival. All obligations arising prior to the termination of this Agreement and all provisions of this Agreement allocating liability between Agency and Contractor shall survive the termination of this Agreement.

8.4 Options upon Breach by Contractor. If Contractor materially breaches any of the terms of this Agreement, including but not limited to those set forth in Section 4, Agency's remedies shall include, but not be limited to, the following:

8.4.1 Immediately terminate the Agreement;

8.4.2 Retain the plans, specifications, drawings, reports, design documents, and any other work product prepared by Contractor pursuant to this Agreement;

8.4.3 Retain a different Contractor to complete the Work not finished by Contractor; and/or

8.4.4 Charge Contractor the difference between the costs to complete the Work that is unfinished at the time of breach and the amount that Agency would have paid Contractor pursuant hereto if Contractor had completed the Work.

Section 9. KEEPING AND STATUS OF RECORDS.

9.1 **Records Created as Part of Contractor's Performance.** All reports, data, maps, models, charts, studies, surveys, photographs, memoranda, plans, studies, specifications, records, files, or any other documents or materials, in electronic or any other form, that Contractor prepares or obtains pursuant to this Agreement and that relate to the matters covered hereunder shall be the property of the Agency. Contractor hereby agrees to deliver those documents to the Agency upon termination of the Agreement. Agency and Contractor agree that, unless approved by Agency in writing, Contractor shall not release to any non-parties to this Agreement any data, plans, specifications, reports and other documents.

9.2 **Contractor's Books and Records.** Contractor shall maintain any and all records or other documents evidencing or relating to charges for Work or expenditures and disbursements charged to the Agency under this Agreement for a minimum of three (3) years, or for any longer period required by law, from the date of final payment to the Contractor under this Agreement.

9.3 **Inspection and Audit of Records.** Any records or documents that this Agreement requires Contractor to maintain shall be made available for inspection, audit, and/or copying at any time during regular business hours, upon oral or written request of the Agency. Under California Government Code Section 8546.7, if the amount of public funds expended under this Agreement exceeds ten thousand dollars ($10,000.00), the Agreement shall be subject to the examination and audit of the State Auditor, at the request of Agency or as part of any audit of the Agency, for a period of three (3) years after final payment under this Agreement.

9.4 **Confidential Information and Disclosure.**

9.4.1 **Confidential Information.** The term "Confidential Information", as used herein, shall mean any and all confidential, proprietary, or trade secret information, whether written, recorded, electronic, oral or otherwise, where the Confidential Information is made available in a tangible medium of expression and marked in a prominent location as confidential, proprietary and/or trade secret information. Confidential Information shall not include information that: (a) was already known to the Receiving Party or is otherwise a matter of public knowledge, (b) was disclosed to

Receiving Party by a third party without violating any confidentiality agreement, (c) was independently developed by Receiving Party without reverse engineering, as evidenced by written records thereof, or (d) was not marked as Confidential Information in accordance with this section.

9.4.2 **Non-Disclosure of Confidential Information**. During the term of this Agreement, either party may disclose (the "Disclosing Party") Confidential Information to the other party (the "Receiving Party"). The Receiving Party: (a) shall hold the Disclosing Party's Confidential Information in confidence; and (b) shall take all reasonable steps to prevent any unauthorized possession, use, copying, transfer or disclosure of such Confidential Information.

9.4.3 **Permitted Disclosure.** Notwithstanding the foregoing, the following disclosures of Confidential Information are allowed. Receiving Party shall endeavor to provide prior written notice to Disclosing Party of any permitted disclosure made pursuant to Section 9.4.3.2 or 9.4.3.3. Disclosing Party may seek a protective order, including without limitation, a temporary restraining order to prevent or contest such permitted disclosure; provided, however, that Disclosing Party shall seek such remedies at its sole expense. Neither party shall have any liability for such permitted disclosures:

9.4.3.1 Disclosure to employees, agents, contractors, subcontractors or other representatives of Receiving Party that have a need to know in connection with this Agreement.

9.4.3.2 Disclosure in response to a valid order of a court, government or regulatory agency or as may otherwise be required by law; and

9.4.3.3 Disclosure by Agency in response to a request pursuant to the California Public Records Act.

9.4.4 **Handling of Confidential Information**. Upon conclusion or termination of the Agreement, Receiving Party shall return to Disclosing Party or destroy Confidential Information (including all copies thereof), if requested by Disclosing Party in writing. Notwithstanding the foregoing, the Receiving Party may retain copies of such Confidential Information, subject to the confidentiality provisions of this Agreement: (a) for archival purposes in its computer system; (b) in its legal department files; and (c) in files of Receiving Party's representatives where such copies are necessary to comply with applicable law. Party shall not disclose the Disclosing Party's Information to any person other than those of the Receiving Party's employees, agents, consultants, contractors and subcontractors who have a need to know in connection with this Agreement.

Section 10. PROJECT SITE.

10.1 Operations at the Project Site. Each Project site may include the power plant areas, all buildings, offices, and other locations where Work is to be performed, including any access roads. Contractor shall perform the Work in such a manner as to cause a minimum of interference with the operations of the Agency; if applicable, the entity for which Contractor is performing the Work, as referenced in Section 1.4; and other contractors at the Project site and to protect all persons and property thereon from damage or injury. Upon completion of the Work at a Project site, Contractor shall leave such Project site clean and free of all tools, equipment, waste materials and rubbish, stemming from or relating to Contractor's Work.

10.2 Contractor's Equipment, Tools, Supplies and Materials. Contractor shall be solely responsible for the transportation, loading and unloading, and storage of any equipment, tools, supplies or materials required for performing the Work, whether owned, leased or rented. Neither Agency nor, if applicable, the entity for which Contractor is performing the Work, as referenced in Section 1.4, will be responsible for any such equipment, supplies or materials which may be lost, stolen or damaged or for any additional rental charges for such. Equipment, tools, supplies and materials left or stored at a Project site, with or without permission, is at Contractor's sole risk. Anything left on the Project site an unreasonable length of time after the Work is completed shall be presumed to have been abandoned by the Contractor. Any transportation furnished by Agency or, if applicable, the entity for which Contractor is performing the Work, as referenced in Section 1.4, shall be solely as an accommodation and neither Agency nor, if applicable, the entity for which Contractor is performing the Work, as referenced in Section 1.4, shall have liability therefor. Contractor shall assume the risk and is solely responsible for its owned, non-owned and hired automobiles, trucks or other motorized vehicles as well as any equipment, tools, supplies, materials or other property which is utilized by Contractor on the Project site. All materials and supplies used by Contractor in the Work shall be new and in good condition.

10.3 Use of Agency Equipment. Contractor shall assume the risk and is solely responsible for its use of any equipment owned and property provided by Agency and, if applicable, the entity for which Contractor is performing the Work, as referenced in Section 1.4, for the performance of Work.

Section 11. WARRANTY.

11.1 Nature of Work. In addition to any and all warranties provided or implied by law or public policy, Contractor warrants that all Work shall be free from defects in design and workmanship, and that Contractor shall perform all Work in accordance with applicable federal, state, and local laws, rules and regulations including engineering, construction and other codes and standards and prudent electrical utility standards, and in accordance with the terms of this Agreement.

11.2 **Deficiencies in Work.** In addition to all other rights and remedies which Agency may have, Agency shall have the right to require, and Contractor shall be obligated at its own expense to perform, all further Work which may be required to correct any deficiencies which result from Contractor's failure to perform any Work in accordance with the standards required by this Agreement. If during the term of this Agreement or the one (1) year period following completion of the Work, any equipment, supplies or other materials or Work used or provided by Contractor under this Agreement fails due to defects in material and/or workmanship or other breach of this Agreement, Contractor shall, upon any reasonable written notice from Agency, replace or repair the same to Agency's satisfaction.

11.3 **Assignment of Warranties.** Contractor hereby assigns to Agency all additional warranties, extended warranties, or benefits like warranties, such as insurance, provided by or reasonably obtainable from suppliers of equipment and material used in the Work.

Section 12. **HEALTH AND SAFETY PROGRAMS.** The Contractor shall establish, maintain, and enforce safe work practices, and implement an accident/incident prevention program intended to ensure safe and healthful operations under their direction. The program shall include all requisite components of such a program under Federal, State and local regulations and shall comply with all site programs established by Agency and, if applicable, the entity for which Contractor is performing the Work, as referenced in Section 1.4.

12.1 Contractor is responsible for acquiring job hazard assessments as necessary to safely perform the Work and provide a copy to Agency upon request.

12.2 Contractor is responsible for providing all employee health and safety training and personal protective equipment in accordance with potential hazards that may be encountered in performance of the Work and provide copies of the certified training records upon request by Agency. Contractor shall be responsible for proper maintenance and/or disposal of their personal protective equipment and material handling equipment.

12.3 Contractor is responsible for ensuring that its lower-tier subcontractors are aware of and will comply with the requirements set forth herein.

12.4 Agency, or its representatives, may periodically monitor the safety performance of the Contractor performing the Work. Contractors and its subcontractors shall be required to comply with the safety and health obligations as established in the Agreement. Non-compliance with safety, health, or fire requirements may result in cessation of work activities, until items in non-compliance are corrected. It is also expressly acknowledged, understood and agreed that no payment shall be due from Agency to Contractor under this Agreement at any time when, or for any Work performed when, Contractor is not in full compliance with this Section 12.

12.5 Contractor shall immediately report any injuries to the Agency site safety representative. Additionally, the Contractor shall investigate and submit to the Agency site safety representative copies of all written accident reports, and coordinate with Agency if further investigation is requested.

12.6 Contractor shall take all reasonable steps and precautions to protect the health of its employees and other site personnel with regard to the Work. Contractor shall conduct occupational health monitoring and/or sampling to determine levels of exposure of its employees to hazardous or toxic substances or environmental conditions. Copies of any sampling results will be forwarded to the Agency site safety representative upon request.

12.7 Contractor shall develop a plan to properly handle and dispose of any hazardous wastes, if any, Contractor generates in performing the Work.

12.8 Contractor shall advise its employees and subcontractors that any employee who jeopardizes his/her safety and health, or the safety and health of others, may be subject to actions including removal from Work.

12.9 Contractor shall, at the sole option of the Agency, develop and provide to the Agency a Hazardous Material Spill Response Plan that includes provisions for spill containment and clean-up, emergency contact information including regulatory agencies and spill sampling and analysis procedures. Hazardous Materials shall include diesel fuel used for trucks owned or leased by the Contractor.

12.10 If Contractor is providing Work to an Agency Member, SCPPA or SCPPA member (collectively "Member" solely for the purpose of this section) pursuant to Section 1.4 hereof, then that Member shall have the same rights as the Agency under Sections 12.1, 12.2, 12.4, 12.5, and 12.6 hereof.

Section 13. MISCELLANEOUS PROVISIONS.

13.1 **Attorneys' Fees.** If a party to this Agreement brings any action, including an action for declaratory relief, to enforce or interpret the provision of this Agreement, the prevailing party shall be entitled to reasonable attorneys' fees in addition to any other relief to which that party may be entitled. The court may set such fees in the same action or in a separate action brought for that purpose.

13.2 **Venue.** In the event that either party brings any action against the other under this Agreement, the Parties agree that trial of such action shall be vested exclusively in the state courts of California in the County of Placer or in the United States District Court for the Eastern District of California.

13.3 **Severability.** If a court of competent jurisdiction finds or rules that any provision of this Agreement is invalid, void, or unenforceable, the provisions of this Agreement not so adjudged shall remain in full force and effect. The invalidity in

whole or in part of any provision of this Agreement shall not void or affect the validity of any other provision of this Agreement.

13.4 **No Implied Waiver of Breach.** The waiver of any breach of a specific provision of this Agreement does not constitute a waiver of any other breach of that term or any other term of this Agreement.

13.5 **Successors and Assigns.** The provisions of this Agreement shall inure to the benefit of and shall apply to and bind the successors and assigns of the Parties.

13.6 **Conflict of Interest.** Contractor may serve other clients, but none whose activities within the corporate limits of Agency or whose business, regardless of location, would place Contractor in a "conflict of interest," as that term is defined in the Political Reform Act, codified at California Government Code Section 81000 *et seq.*

Contractor shall not employ any Agency official in the work performed pursuant to this Agreement. No officer or employee of Agency shall have any financial interest in this Agreement that would violate California Government Code Sections 1090 *et seq.*

13.7 **Contract Administrator.** This Agreement shall be administered by Joel Ledesma, Assistant General Manager, or his/her designee, who shall act as the Agency's representative. All correspondence shall be directed to or through the representative.

13.8 **Notices.** Any written notice to Contractor shall be sent to:

Hart High Voltage Apparatus Repair & Testing Co., Inc.
Attention: Jim Wolfgram
1612 Poole Blvd.
Yuba City, CA 95993

Any written notice to Agency shall be sent to:

Randy S. Howard
General Manager
Northern California Power Agency
651 Commerce Drive
Roseville, CA 95678

With a copy to:

Jane E. Luckhardt
General Counsel
Northern California Power Agency
651 Commerce Drive
Roseville, CA 95678

13.9 Professional Seal. Where applicable in the determination of the Agency, the first page of a technical report, first page of design specifications, and each page of construction drawings shall be stamped/sealed and signed by the licensed professional responsible for the report/design preparation.

13.10 Integration; Incorporation. This Agreement, including all the exhibits attached hereto, represents the entire and integrated agreement between Agency and Contractor and supersedes all prior negotiations, representations, or agreements, either written or oral. All exhibits attached hereto are incorporated by reference herein.

13.11 Alternative Dispute Resolution. If any dispute arises between the Parties that cannot be settled after engaging in good faith negotiations, Agency and Contractor agree to resolve the dispute in accordance with the following:

13.11.1 Each party shall designate a senior management or executive level representative to negotiate any dispute;

13.11.2 The representatives shall attempt, through good faith negotiations, to resolve the dispute by any means within their authority.

13.11.3 If the issue remains unresolved after fifteen (15) days of good faith negotiations, the Parties shall attempt to resolve the disagreement by negotiation between legal counsel. If the above process fails, the Parties shall resolve any remaining disputes through mediation to expedite the resolution of the dispute.

13.11.4 The mediation process shall provide for the selection within fifteen (15) days by both Parties of a disinterested third person as mediator, shall be commenced within thirty (30) days and shall be concluded within fifteen (15) days from the commencement of the mediation.

13.11.5 The Parties shall equally bear the costs of any third party in any alternative dispute resolution process.

13.11.6 The alternative dispute resolution process is a material condition to this Agreement and must be exhausted as an administrative remedy prior to either Party initiating legal action. This alternative dispute resolution process is not intended to nor shall be construed to change the time periods for filing a claim or action specified by Government Code §§ 900 *et seq*.

13.12 Controlling Provisions. In the case of any conflict between the terms of this Agreement and the Exhibits hereto, a Purchase Order, or Contractor's Proposal (if any), the Agreement shall control. In the case of any conflict between the Exhibits hereto and a Purchase Order or the Contractor's Proposal, the Exhibits shall control. In the case of any conflict between the terms of a Purchase Order and the Contractor's Proposal, the Purchase Order shall control.

13.13 Counterparts. This Agreement may be executed in multiple counterparts, each of which shall be an original and all of which together shall constitute one agreement.

13.14 Construction of Agreement. Each party hereto has had an equivalent opportunity to participate in the drafting of the Agreement and/or to consult with legal counsel. Therefore, the usual construction of an agreement against the drafting party shall not apply hereto.

13.15 No Third Party Beneficiaries. This Agreement is made solely for the benefit of the parties hereto, with no intent to benefit any non-signator third parties. However, should Contractor provide Work to an Agency member, SCPPA or SCPPA member (collectively for the purpose of this section only "Member") pursuant to Section 1.4, the parties recognize that such Member may be a third party beneficiary solely as to the Purchase Order and Requested Work relating to such Member.

The Parties have executed this Agreement as of the date signed by the Agency.

NORTHERN CALIFORNIA POWER AGENCY	HART HIGH VOLTAGE APPARATUS REPAIR & TESTING CO., INC.
Date_____	Date_____
_____	_____
RANDY S. HOWARD, General Manager	**JIM WOLFGRAM,** President

Attest:

_____
Assistant Secretary of the Commission

Approved as to Form:

_____
Jane E. Luckhardt, General Counsel

EXHIBIT A

SCOPE OF WORK

Hart High Voltage Apparatus Repairs & Testing Co., Inc. ("Contractor") shall provide specialized electrical services as requested by the Northern California Power Agency ("Agency") at any facilities owned or operated by Agency, NCPA Members, Southern California Public Power Authority (SCPPA) or SCPPA members.

Services to include but not be limited to the following:

Core testing performed as follows:

- Microprocessor, solid state and electro-mechanical protective relays (setting, programming etc.)
- Current transformers
- Potential transformers
- Current circuit verification
- Potential circuit verification
- Control circuit verification
- Open air disconnect switch
- Circuit breaker
- Transformer
- Generator
- Grounding

Typical substation tests performed as follows:

- Protective relays: Perform automated and manual testing using 3Ø voltage and 3Ø current test sets, verify logic.
- Current transformers: Ratio, saturation, power factor, insulation resistance.
- Potential transformers: Ratio, power factor, insulation resistance.
- Current circuit: Burden, circuit verification per drawings.
- Potential circuit: Burden, circuit verification per drawings.
- Control circuit: Circuit verification per drawings.
- Open air disconnect: Contact resistance, insulation resistance, operational.
- Circuit breaker: Contact resistance, insulation resistance, time travel, power factor, insulation resistance, operational.
- Transformer: Power factor, excitation, turns ratio, wdg resistance, insulation resistance, dielectric, sweep frequency response, operational.
- Generator: Insulation resistance, wdg resistance, power factor.
- Grounding: Resistance to remote earth, point-to-point.

No project under this Agreement shall include Work that would qualify as a Public Works Project under the California Public Contract Code.

EXHIBIT B

COMPENSATION SCHEDULE AND HOURLY FEES

Compensation for all work, including hourly fees and expenses, shall not exceed the amount set forth in Section 2 hereof. The hourly rates and or compensation break down and an estimated amount of expenses is as follows:

2021 Rate Schedule

High-voltage Apparatus Repair & Testing (HART) offers complete testing and maintenance service for high and low voltage power distribution systems and equipment, and we are on call 24 hours a day.

Billing Rates	Straight Time*	Overtime**	Double-time***
Field Technicians	$180.00/Hour	$270.00/Hour	$360.00/Hour

* Straight time rates apply to all work or travel during a normal eight hour workday, Monday–Friday, excluding Holidays.
** Overtime rates apply to all work or travel time other than that qualifying as straight time.
*** Double-time rates apply to all nationally recognized holidays, Sundays, and after 12 hours.

Minimum Billing — 0 - 4/hrs Billed @ 4.0hrs + Exp; 4 - 8/hrs Billed @ 8.0hrs + Exp

Equipment Charges (Partial List)

Doble Power Factor Test Set M-4000	$500.00/Day
AVO MPRT	$120.00/Day
Multi-Amp PS 9160 High Current Test Set	$100.00/Day
Multi-Amp CB 845 High Current Test Set	$ 50.00/Day
Multi-Amp CTER 91 Current Transformer Test Set	$ 60.00/Day
Multi-Amp Pulsar Relay Test Set	$ 80.00/Day
Multi-Amp SR 90 Relay Test Set	$ 60.00/Day
Vanguard Transformer Ohmmeter	$ 50.00/Day
Vanguard Time Travel Analyzer	$ 50.00/Day
Biddle 5 KV Motorized Meggar	$ 50.00/Day
Biddle DLRO Ductor	$ 25.00/Day
Biddle TTR Test Set	$ 25.00/Day
Hipotronics 80 KV HiPot	$ 50.00/Day
Biddle DET 2/2 Earth Tester	$ 50.00/Day

Expenses

Living Expenses	$300.00/Per Diem/Per Man

Miscellaneous expenses such as equipment rental, parking, telephone, bridge tolls, automobile rentals, and expendable materials will be billed at cost plus 30% plus applicable tax and freight charges.

Mileage

Under 1 Ton	$ 1.46/Mile Portal – To – Portal
1 Ton and Over	$ 1.66/Mile Portal – To – Portal

Pricing excludes any bonds, fees, permits, and/or owner controlled insurance programs that are project related. If an OCIP is required, a separate proposal will be submitted to cover the additional insurance costs.

Rates subject to annual adjustment.

Pricing for services to be performed at NCPA Member or SCPPA locations will be quoted at the time services are requested.

NOTE: As a public agency, NCPA shall not reimburse Contractor for travel, food and related costs in excess of those permitted by the Internal Revenue Service.

EXHIBIT C

CERTIFICATION

Affidavit of Compliance for Contractors

I,

_____

(Name of person signing affidavit)(Title)

do hereby certify that background investigations to ascertain the accuracy of the identity and employment history of all employees of

Hart High Voltage Apparatus Repair & Testing Co., Inc.

(Company name)

for contract work at:

LODI ENERGY CENTER, 12745 N. THORNTON ROAD, LODI, CA 95242

(Project name and location)

have been conducted as required by the California Energy Commission Decision for the above-named project.

_____

(Signature of officer or agent)

Dated this _____ day of _____, 20 _____.

THIS AFFIDAVIT OF COMPLIANCE SHALL BE APPENDED TO THE PROJECT SECURITY PLAN AND SHALL BE RETAINED AT ALL TIMES AT THE PROJECT SITE FOR REVIEW BY THE CALIFORNIA ENERGY COMMISSION COMPLIANCE PROJECT MANAGER.

NOT APPLICABLE

EXHIBIT D

CERTIFICATION

Affidavit of Compliance for Hazardous Materials Transport Vendors

I, _____,

(Name of person signing affidavit)(Title)

do hereby certify that the below-named company has prepared and implemented security plans in conformity with 49 CFR 172, subpart I and has conducted employee background investigations in conformity with 49 CFR 172.802(a), as the same may be amended from time to time,

_____

(Company name)

for hazardous materials delivery to:

LODI ENERGY CENTER, 12745 N. THORNTON ROAD, LODI, CA 95242

(Project name and location)

as required by the California Energy Commission Decision for the above-named project.

_____

(Signature of officer or agent)

Dated this _____ day of _____, 20 __.

THIS AFFIDAVIT OF COMPLIANCE SHALL BE APPENDED TO THE PROJECT SECURITY PLAN AND SHALL BE RETAINED AT ALL TIMES AT THE PROJECT SITE FOR REVIEW BY THE CALIFORNIA ENERGY COMMISSION COMPLIANCE PROJECT MANAGER.

NOT APPLICABLE

EXHIBIT E

ATTACHMENT A [from MLA]
AGREEMENT TO BE BOUND

MAINTENANCE LABOR AGREEMENT ATTACHMENT
LODI ENERGY CENTER PROJECT

The undersigned hereby certifies and agrees that:

1) It is an Employer as that term is defined in Section 1.4 of the Lodi Energy Center Project Maintenance Labor Agreement ("Agreement" solely for the purposes of this Exhibit E) because it has been, or will be, awarded a contract or subcontract to assign, award or subcontract Covered Work on the Project (as defined in Section 1.2 and 2.1 of the Agreement), or to authorize another party to assign, award or subcontract Covered Work, or to perform Covered Work.

2) In consideration of the award of such contract or subcontract, and in further consideration of the promises made in the Agreement and all attachments thereto (a copy of which was received and is hereby acknowledged), it accepts and agrees to be bound by the terms and condition of the Agreement, together with any and all amendments and supplements now existing or which are later made thereto.

3) If it performs Covered Work, it will be bound by the legally established trust agreements designated in local master collective bargaining agreements, and hereby authorizes the parties to such local trust agreements to appoint trustees and successor trustee to administer the trust funds, and hereby ratifies and accepts the trustees so appointed as if made by the undersigned.

4) It has no commitments or agreements that would preclude its full and complete compliance with the terms and conditions of the Agreement.

5) It will secure a duly executed Agreement to be Bound, in form identical to this documents, from any Employer(s) at any tier or tiers with which it contracts to assign, award, or subcontract Covered Work, or to authorize another party to assign, award or subcontract Covered Work, or to perform Covered Work.

DATED: _____ Name of Employer _____

_____
(Authorized Officer & Title)

_____

_____
(Address)

_____

15

Commission Staff Report

COMMISSION MEETING DATE: August 26, 2021

SUBJECT: Cisco Air Systems, Inc. – Five Year Multi-Task General Services Agreement for Specialized OEM Air Compressor Maintenance Services; Applicable to the following: All Northern California Power Agency (NCPA) Facilities, NCPA Members, Southern California Public Power Authority (SCPPA), and SCPPA Members

AGENDA CATEGORY: Consent

FROM:	Joel Ledesma	**METHOD OF SELECTION:**
	Assistant General Manager	*N/A*
Division:	Generation Services	*If other, please describe:*
Department:	Combustion Turbines	

IMPACTED MEMBERS:

All Members	☒	**City of Lodi**	☐	**City of Shasta Lake**	☐
Alameda Municipal Power	☐	**City of Lompoc**	☐	**City of Ukiah**	☐
San Francisco Bay Area Rapid Transit	☐	**City of Palo Alto**	☐	**Plumas-Sierra REC**	☐
City of Biggs	☐	**City of Redding**	☐	**Port of Oakland**	☐
City of Gridley	☐	**City of Roseville**	☐	**Truckee Donner PUD**	☐
City of Healdsburg	☐	**City of Santa Clara**	☐	**Other**	☐

If other, please specify _____

_____

RECOMMENDATION:

Approve Resolution 21-78 authorizing the General Manager or his designee to enter into a Multi-Task General Services Agreement with Cisco Air Systems, Inc. for specialized OEM air compressor maintenance services, with any non-substantial changes recommended and approved by the NCPA General Counsel, which shall not exceed $1,000,000 over five years, for use at any facilities owned and/or operated by NCPA, NCPA Members, by SCPPA, and SCPPA Members.

BACKGROUND:

Specialized OEM air compressor maintenance services are required from time to time for the operation and maintenance of facilities owned and/or operated by NCPA, NCPA Members, by SCPPA, and SCPPA Members. Cisco Air Systems, Inc. was the successful bidder on a recent solicitation for specialized OEM air compressor maintenance at the CT facilities. NCPA has utilized this vendor in the past, and has a good working relationship with this vendor. NCPA desires to enter into this agreement so established terms and conditions are in place should this vendor be the successful bidder on future projects. NCPA has an agreement in place for similar services with California Compression, LLC.

FISCAL IMPACT:

Upon execution, the total cost of the agreement is not to exceed $1,000,000 over five years. Purchase orders referencing the terms and conditions of the agreement will be issued following NCPA procurement policies and procedures.

SELECTION PROCESS:

This enabling agreement does not commit NCPA to any expenditure of funds. At the time services are needed, NCPA will bid the specific scope of work consistent with NCPA procurement policies and procedures. NCPA seeks bids from qualified providers as required. Bids are awarded to the vendor providing the best overall value to NCPA. NCPA will issue purchase orders based on cost and availability of the services needed at the time the service is required.

ENVIRONMENTAL ANALYSIS:

This activity would not result in a direct or reasonably foreseeable indirect change in the physical environment and is therefore not a "project" for purposes of Section 21065 the California Environmental Quality Act. No environmental review is necessary.

COMMITTEE REVIEW:

On August 4, 2021 the Facilities Committee reviewed and endorsed the recommendation above for Commission approval.

On August 9, 2021 the Lodi Energy Center Project Participant Committee reviewed and approved the recommendation above for Commission approval.

Respectfully submitted,

RANDY S. HOWARD
General Manager

Attachments (2):

- Resolution 21-78
- Multi-Task General Services Agreement with Cisco Air Systems, Inc.

SR: 200:21

RESOLUTION 21-78

RESOLUTION OF THE NORTHERN CALIFORNIA POWER AGENCY APPROVING A MULTI-TASK GENERAL SERVICES AGREEMENT WITH CISCO AIR SYSTEMS, INC.

(reference Staff Report #200:21)

WHEREAS, specialized OEM air compressor maintenance services are required from time to time for the operation and maintenance of facilities owned and/or operated by the Northern California Power Agency (NCPA), NCPA Members, by the Southern California Public Power Authority (SCPPA), and SCPPA Members; and

WHEREAS, Cisco Air Systems, Inc. is a provider of these services; and

WHEREAS, the NCPA Commission has reviewed the Multi-Task General Services Agreement with Cisco Air Systems, Inc. to provide such services as needed at any facilities owned and/or operated by NCPA, NCPA Members, by SCPPA, and SCPPA Members; and

WHEREAS, this activity would not result in a direct or reasonably foreseeable indirect change in the physical environment and is therefore not a "project" for purposes of Section 21065 the California Environmental Quality Act. No environmental review is necessary; and

NOW, THEREFORE BE IT RESOLVED, that the Commission of the Northern California Power Agency authorizes the General Manager or his designee to enter into said Agreement, with any non-substantial changes as approved by the NCPA General Counsel, which shall not exceed $1,000,000 over five years, for use at any facilities owned and/or operated by NCPA, NCPA Members, by SCPPA, and SCPPA Members.

PASSED, ADOPTED and APPROVED this ____ day of _____, 2021 by the following vote on roll call:

	Vote	Abstained	Absent
Alameda			
San Francisco BART			
Biggs			
Gridley			
Healdsburg			
Lodi			
Lompoc			
Palo Alto			
Port of Oakland			
Redding			
Roseville			
Santa Clara			
Shasta Lake			
Truckee Donner			
Ukiah			
Plumas-Sierra			

_____
DAVID HAGELE
CHAIR

ATTEST:

_____
CARY A. PADGETT
ASSISTANT SECRETARY

MULTI-TASK
GENERAL SERVICES AGREEMENT BETWEEN
THE NORTHERN CALIFORNIA POWER AGENCY AND
CISCO AIR SYSTEMS, INC.

This Multi-Task General Services Agreement ("Agreement') is made by and between the Northern California Power Agency, a joint powers agency with its main office located at 651 Commerce Drive, Roseville, CA 95678-6420 ("Agency") and Cisco Air Systems, Inc., an S corporation with its office located at 214 27th Street, Sacramento, CA 95816 ("Contractor") (together sometimes referred to as the "Parties") as of _____, 2021 ("Effective Date") in Roseville, California.

Section 1. **SCOPE OF WORK**. Subject to the terms and conditions set forth in this Agreement, Contractor is willing to provide to Agency the range of services and/or goods described in the Scope of Work attached hereto as Exhibit A and incorporated herein ("Work").

1.1 **Term of Agreement.** The term of this Agreement shall begin on the Effective Date and shall end when Contractor completes the Work, or no later than five (5) years from the date this Agreement was signed by Agency, whichever is shorter.

1.2 **Standard of Performance.** Contractor shall perform the Work in the manner and according to the standards observed by a competent practitioner of the profession in which Contractor is engaged and for which Contractor is providing the Work. Contractor represents that it is licensed, qualified and experienced to provide the Work set forth herein.

1.3 **Assignment of Personnel.** Contractor shall assign only competent personnel to perform the Work. In the event that Agency, in its sole discretion, at any time during the term of this Agreement, requests the reassignment of any such personnel, Contractor shall, immediately upon receiving written notice from Agency of such request, reassign such personnel.

1.4 **Work Provided.** Work provided under this Agreement by Contractor may include Work directly to the Agency or, as requested by the Agency and consistent with the terms of this Agreement, to Agency members, Southern California Public Power Authority ("SCPPA") or SCPPA members.

1.5 **Request for Work to be Performed.** At such time that Agency determines to have Contractor perform Work under this Agreement, Agency shall issue a Purchase Order. The Purchase Order shall identify the specific Work to be performed ("Requested Work"), may include a not-to-exceed cap on monetary cap on Requested Work and all related expenditures authorized by that Purchase Order, and shall include a time by which the Requested Work shall be completed. Contractor shall have seven calendar days from the date of the Agency's issuance of the Purchase Order in which to respond in writing that Contractor chooses not to perform the Requested Work. If Contractor agrees to perform the Requested Work, begins to perform the Requested Work, or does not respond within the seven day period specified, then Contractor will have

agreed to perform the Requested Work on the terms set forth in the Purchase Order, this Agreement and its Exhibits.

Section 2. COMPENSATION. Agency hereby agrees to pay Contractor an amount **NOT TO EXCEED** ONE MILLION dollars ($1,000,000.00) for the Work, which shall include all fees, costs, expenses and other reimbursables, as set forth in Contractor's fee schedule, attached hereto and incorporated herein as Exhibit B. This dollar amount is not a guarantee that Agency will pay that full amount to the Contractor, but is merely a limit of potential Agency expenditures under this Agreement.

2.1 Invoices. Contractor shall submit invoices, not more often than once a month during the term of this Agreement, based on the cost for services performed and reimbursable costs incurred prior to the invoice date. Invoices shall contain the following information:

- The beginning and ending dates of the billing period;
- Work performed;
- The Purchase Order number authorizing the Requested Work;
- At Agency's option, for each work item in each task, a copy of the applicable time entries or time sheets shall be submitted showing the name of the person doing the work, the hours spent by each person, a brief description of the work, and each reimbursable expense, with supporting documentation, to Agency's reasonable satisfaction;
- At Agency's option, the total number of hours of work performed under the Agreement by Contractor and each employee, agent, and subcontractor of Contractor performing work hereunder.

Invoices shall be sent to:

Northern California Power Agency
651 Commerce Drive
Roseville, California 95678
Attn: Accounts Payable
AcctsPayable@ncpa.com

2.2 Monthly Payment. Agency shall make monthly payments, based on invoices received, for Work satisfactorily performed, and for authorized reimbursable costs incurred. Agency shall have thirty (30) days from the receipt of an invoice that complies with all of the requirements above to pay Contractor.

2.3 Payment of Taxes. Contractor is solely responsible for the payment of all federal, state and local taxes, including employment taxes, incurred under this Agreement.

2.4 Authorization to Perform Work. The Contractor is not authorized to perform any Work or incur any costs whatsoever under the terms of this Agreement until receipt of a Purchase Order from the Contract Administrator.

2.5 Timing for Submittal of Final Invoice. Contractor shall have ninety (90) days after completion of the Requested Work to submit its final invoice for the Requested Work. In the event Contractor fails to submit an invoice to Agency for any amounts due within the ninety (90) day period, Contractor is deemed to have waived its right to collect its final payment for the Requested Work from Agency.

Section 3. FACILITIES AND EQUIPMENT. Except as set forth herein, Contractor shall, at its sole cost and expense, provide all facilities and equipment that may be necessary to perform the Work.

Section 4. INSURANCE REQUIREMENTS. Before beginning any Work under this Agreement, Contractor, at its own cost and expense, shall procure the types and amounts of insurance listed below and shall maintain the types and amounts of insurance listed below for the period covered by this Agreement.

4.1 Workers' Compensation. If Contractor employs any person, Contractor shall maintain Statutory Workers' Compensation Insurance and Employer's Liability Insurance for any and all persons employed directly or indirectly by Contractor with limits of not less than one million dollars ($1,000,000.00) per accident.

4.2 Commercial General and Automobile Liability Insurance.

4.2.1 Commercial General Insurance. Contractor shall maintain commercial general liability insurance for the term of this Agreement, including products liability, covering any loss or liability, including the cost of defense of any action, for bodily injury, death, personal injury and broad form property damage which may arise out of the operations of Contractor. The policy shall provide a minimum limit of $2,000,000 per occurrence/$2,000,000 aggregate. Commercial general coverage shall be at least as broad as ISO Commercial General Liability form CG 0001 (current edition) on "an occurrence" basis covering comprehensive General Liability, with a self-insured retention or deductible of no more than $100,000. No endorsement shall be attached limiting the coverage.

4.2.2 Automobile Liability. Contractor shall maintain automobile liability insurance form CA 0001 (current edition) for the term of this Agreement covering any loss or liability, including the cost of defense of any action, arising from the operation, maintenance or use of any vehicle (symbol 1), whether or not owned by the Contractor, on or off Agency premises. The policy shall provide a minimum limit of $2,000,000 per each accident, with a self-insured retention or deductible of no more than $100,000. This insurance shall provide contractual liability covering all motor vehicles and mobile equipment to the extent coverage may be excluded from general liability insurance.

4.2.3 General Liability/Umbrella Insurance. The coverage amounts set forth above may be met by a combination of underlying and umbrella policies as long as in combination the limits equal or exceed those stated.

4.3 Professional Liability Insurance. Not Applicable.

4.4 Pollution Insurance. Not Applicable.

4.5 All Policies Requirements.

4.5.1 Verification of coverage. Prior to beginning any work under this Agreement, Contractor shall provide Agency with (1) a Certificate of Insurance that demonstrates compliance with all applicable insurance provisions contained herein and (2) policy endorsements to the policies referenced in Section 4.2 and in Section 4.4, if applicable, adding the Agency as an additional insured and declaring such insurance primary in regard to work performed pursuant to this Agreement.

4.5.2 Notice of Reduction in or Cancellation of Coverage. Contractor shall provide at least thirty (30) days prior written notice to Agency of any reduction in scope or amount, cancellation, or modification adverse to Agency of the policies referenced in Section 4.

4.5.3 Higher Limits. If Contractor maintains higher limits than the minimums specified herein, the Agency shall be entitled to coverage for the higher limits maintained by the Contractor.

4.5.4 Additional Certificates and Endorsements. If Contractor performs Work for Agency members, SCPPA and/or SCPPA members pursuant to this Agreement, Contractor shall provide the certificates of insurance and policy endorsements, as referenced in Section 4.5.1, naming the specific Agency member, SCPPA and/or SCPPA member for which the Work is to be performed.

4.5.5 Waiver of Subrogation. Contractor agrees to waive subrogation which any insurer of Contractor may acquire from Contractor by virtue of the payment of any loss. Contractor agrees to obtain any endorsement that may be necessary to effect this waiver of subrogation. In addition, the Workers' Compensation policy shall be endorsed with a waiver of subrogation in favor of Agency for all work performed by Contractor, its employees, agents and subcontractors.

4.6 Contractor's Obligation. Contractor shall be solely responsible for ensuring that all equipment, vehicles and other items utilized in the performance of Work are operated, provided or otherwise utilized in a manner that ensures they are and remain covered by the policies referenced in Section 4 during this Agreement. Contractor shall also ensure that all workers involved in the provision of Work are properly classified as employees, agents or independent contractors and are and remain covered by any and all workers' compensation insurance required by applicable law during this Agreement.

Section 5. INDEMNIFICATION AND CONTRACTOR'S RESPONSIBILITIES.

5.1 Effect of Insurance. Agency's acceptance of insurance certificates and endorsements required under this Agreement does not relieve Contractor from liability under this indemnification and hold harmless clause. This indemnification and hold harmless clause shall apply to any damages or claims for damages whether or not such insurance policies shall have been determined to apply. By execution of this Agreement, Contractor acknowledges and agrees to the provisions of this section and that it is a material element of consideration.

5.2 Scope. Contractor shall indemnify, defend with counsel reasonably acceptable to the Agency, and hold harmless the Agency, and its officials, commissioners, officers, employees, agents and volunteers from and against all losses, liabilities, claims, demands, suits, actions, damages, expenses, penalties, fines, costs (including without limitation costs and fees of litigation), judgments and causes of action of every nature arising out of or in connection with any acts or omissions by Contractor, its officers, officials, agents, and employees, except as caused by the sole or gross negligence of Agency. Notwithstanding, should this Agreement be construed as a construction agreement under Civil Code section 2783, then the exception referenced above shall also be for the active negligence of Agency.

5.3 Transfer of Title. Not Applicable.

Section 6. STATUS OF CONTRACTOR.

6.1 Independent Contractor. Contractor is an independent contractor and not an employee of Agency. Agency shall have the right to control Contractor only insofar as the results of Contractor's Work and assignment of personnel pursuant to Section 1; otherwise, Agency shall not have the right to control the means by which Contractor accomplishes Work rendered pursuant to this Agreement. Notwithstanding any other Agency, state, or federal policy, rule, regulation, law, or ordinance to the contrary, Contractor and any of its employees, agents, and subcontractors providing services under this Agreement shall not qualify for or become entitled to, and hereby agree to waive any and all claims to, any compensation, benefit, or any incident of employment by Agency, including but not limited to eligibility to enroll in the California Public Employees Retirement System (PERS) as an employee of Agency and entitlement to any contribution to be paid by Agency for employer contributions and/or employee contributions for PERS benefits.

Contractor shall indemnify, defend, and hold harmless Agency for the payment of any employee and/or employer contributions for PERS benefits on behalf of Contractor or its employees, agents, or subcontractors, as well as for the payment of any penalties and interest on such contributions, which would otherwise be the responsibility of Agency. Contractor and Agency acknowledge and agree that compensation paid by Agency to Contractor under this Agreement is based upon Contractor's estimated costs of providing the Work, including salaries and benefits of employees, agents and subcontractors of Contractor.

Contractor shall indemnify, defend, and hold harmless Agency from any lawsuit, administrative action, or other claim for penalties, losses, costs, damages, expense and liability of every kind, nature and description that arise out of, pertain to, or relate to such claims, whether directly or indirectly, due to Contractor's failure to secure workers' compensation insurance for its employees, agents, or subcontractors.

Contractor agrees that it is responsible for the provision of group healthcare benefits to its fulltime employees under 26 U.S.C. § 4980H of the Affordable Care Act. To the extent permitted by law, Contractor shall indemnify, defend and hold harmless Agency from any penalty issued to Agency under the Affordable Care Act resulting from the performance of the Services by any employee, agent, or subcontractor of Contractor.

6.2 **Contractor Not Agent.** Except as Agency may specify in writing, Contractor shall have no authority, express or implied, to act on behalf of Agency in any capacity whatsoever as an agent. Contractor shall have no authority, express or implied, pursuant to this Agreement to bind Agency to any obligation whatsoever.

6.3 **Assignment and Subcontracting.** This Agreement contemplates personal performance by Contractor and is based upon a determination of Contractor's unique professional competence, experience, and specialized professional knowledge. A substantial inducement to Agency for entering into this Agreement was and is the personal reputation and competence of Contractor. Contractor may not assign this Agreement or any interest therein without the prior written approval of the Agency. Contractor shall not subcontract any portion of the performance contemplated and provided for herein, other than to the subcontractors identified in Exhibit A, without prior written approval of the Agency. Where written approval is granted by the Agency, Contractor shall supervise all work subcontracted by Contractor in performing the Work and shall be responsible for all work performed by a subcontractor as if Contractor itself had performed such work. The subcontracting of any work to subcontractors shall not relieve Contractor from any of its obligations under this Agreement with respect to the Work and Contractor is obligated to ensure that any and all subcontractors performing any Work shall be fully insured in all respects and to the same extent as set forth under Section 4, to Agency's satisfaction.

6.4 **Certification as to California Energy Commission.** If requested by the Agency, Contractor shall, at the same time it executes this Agreement, execute Exhibit C.

6.5 **Certification as to California Energy Commission Regarding Hazardous Materials Transport Vendors.** If requested by the Agency, Contractor shall, at the same time it executes this Agreement, execute Exhibit D.

6.6 **Maintenance Labor Agreement.** If the Work is subject to the terms of one or more Maintenance Labor Agreements, which are applicable only to certain types

of construction, repair and/or maintenance projects, then Contractor shall execute Exhibit E and/or similar documentation as to compliance.

Section 7. LEGAL REQUIREMENTS.

7.1 Governing Law. The laws of the State of California shall govern this Agreement.

7.2 Compliance with Applicable Laws. Contractor and its subcontractors and agents, if any, shall comply with all laws applicable to the performance of the work hereunder.

7.3 Licenses and Permits. Contractor represents and warrants to Agency that Contractor and its employees, agents, and subcontractors (if any) have and will maintain at their sole expense during the term of this Agreement all licenses, permits, qualifications, and approvals of whatever nature that are legally required to practice their respective professions.

7.4 Monitoring by DIR. The Work is subject to compliance monitoring and enforcement by the Department of Industrial Relations.

7.5 Registration with DIR. During the term of this Agreement, Contractor warrants that it is registered with the Department of Industrial Relations and qualified to perform Work consistent with Labor Code section 1725.5.

7.6 Prevailing Wage Rates. In accordance with California Labor Code Section 1771, not less than the general prevailing rate of per diem wages for work of a similar character in the locality in which the Work is to be performed, and not less than the general prevailing rate of per diem wages for holiday and overtime work as provided in the California Labor Code must be paid to all workers engaged in performing the Work. In accordance with California Labor Code Section 1770 and following, the Director of Industrial Relations has determined the general prevailing wage per diem rates for the locality in which the Work is to be performed; the Agency has obtained the general prevailing rate of per diem wages and the general rate for holiday and overtime work in the locality in which the Work is to be performed for each craft, classification or type of worker needed to perform the project; and copies of the prevailing rate of per diem wages are on file at the Agency and will be made available on request. Throughout the performance of the Work, Contractor must comply with all applicable laws and regulations that apply to wages earned in performance of the Work. Contractor assumes all responsibility for such payments and shall defend, indemnify and hold the Agency harmless from any and all claims made by the State of California, the Department of Industrial Relations, any subcontractor, any worker or any other third party with regard thereto.

Additionally, in accordance with the California Administrative Code, Title 8, Group 3, Article 2, Section 16000, Publication of Prevailing Wage Rates by Awarding

Bodies, copies of the applicable determination of the Director can be found on the web at: http://www.dir.ca.gov/DLSR/PWD/ and may be reviewed at any time.

Contractor shall provide a certified copy of its payroll, on forms to be determined by the Agency and consistent with the Labor Code, within ten (10) days of the Contractor's receipt of Agency's written request therefor. Contractor's failure to timely comply with this provision may subject the Contractor to penalties pursuant to state law.

Contractor shall comply with applicable law, including Labor Code Sections 1774 and 1775. In accordance with Section 1775, Contractor shall forfeit as a penalty to Agency $200.00 for each calendar day or portion thereof, for each worker paid less than the prevailing rates as determined by the Director of Industrial Relations for such work or craft in which such worker is employed for any Work done under the Agreement by Contractor or by any subcontractor under Contractor in violation of the provisions of the Labor Code and in particular, Labor Code Sections 1770 *et seq.* In addition to the penalty and pursuant to Section 1775, the difference between such prevailing wage rates and the amount paid to each worker for each calendar day or portion thereof for which each worker was paid less than the prevailing wage rate shall be paid to each worker by the Contractor.

Section 8. TERMINATION AND MODIFICATION.

8.1 **Termination.** Agency may cancel this Agreement at any time and without cause upon ten (10) days prior written notice to Contractor.

In the event of termination, Contractor shall be entitled to compensation for Work satisfactorily completed as of the effective date of termination; Agency, however, may condition payment of such compensation upon Contractor delivering to Agency any or all records or documents (as referenced in Section 9.1 hereof).

8.2 **Amendments.** The Parties may amend this Agreement only by a writing signed by both of the Parties.

8.3 **Survival.** All obligations arising prior to the termination of this Agreement and all provisions of this Agreement allocating liability between Agency and Contractor shall survive the termination of this Agreement.

8.4 **Options upon Breach by Contractor.** If Contractor materially breaches any of the terms of this Agreement, including but not limited to those set forth in Section 4, Agency's remedies shall include, but not be limited to, the following:

8.4.1 Immediately terminate the Agreement;

8.4.2 Retain the plans, specifications, drawings, reports, design documents, and any other work product prepared by Contractor pursuant to this Agreement;

8.4.3 Retain a different Contractor to complete the Work not finished by Contractor; and/or

8.4.4 Charge Contractor the difference between the costs to complete the Work that is unfinished at the time of breach and the amount that Agency would have paid Contractor pursuant hereto if Contractor had completed the Work.

Section 9. KEEPING AND STATUS OF RECORDS.

9.1 **Records Created as Part of Contractor's Performance.** All reports, data, maps, models, charts, studies, surveys, photographs, memoranda, plans, studies, specifications, records, files, or any other documents or materials, in electronic or any other form, that Contractor prepares or obtains pursuant to this Agreement and that relate to the matters covered hereunder shall be the property of the Agency. Contractor hereby agrees to deliver those documents to the Agency upon termination of the Agreement. Agency and Contractor agree that, unless approved by Agency in writing, Contractor shall not release to any non-parties to this Agreement any data, plans, specifications, reports and other documents.

9.2 **Contractor's Books and Records.** Contractor shall maintain any and all records or other documents evidencing or relating to charges for Work or expenditures and disbursements charged to the Agency under this Agreement for a minimum of three (3) years, or for any longer period required by law, from the date of final payment to the Contractor under this Agreement.

9.3 **Inspection and Audit of Records.** Any records or documents that this Agreement requires Contractor to maintain shall be made available for inspection, audit, and/or copying at any time during regular business hours, upon oral or written request of the Agency. Under California Government Code Section 8546.7, if the amount of public funds expended under this Agreement exceeds ten thousand dollars ($10,000.00), the Agreement shall be subject to the examination and audit of the State Auditor, at the request of Agency or as part of any audit of the Agency, for a period of three (3) years after final payment under this Agreement.

9.4 **Confidential Information and Disclosure.**

9.4.1 **Confidential Information.** The term "Confidential Information", as used herein, shall mean any and all confidential, proprietary, or trade secret information, whether written, recorded, electronic, oral or otherwise, where the Confidential Information is made available in a tangible medium of expression and marked in a prominent location as confidential, proprietary and/or trade secret information. Confidential Information shall not include information that: (a) was already known to the Receiving Party or is otherwise a matter of public knowledge, (b) was disclosed to

Receiving Party by a third party without violating any confidentiality agreement, (c) was independently developed by Receiving Party without reverse engineering, as evidenced by written records thereof, or (d) was not marked as Confidential Information in accordance with this section.

9.4.2 **Non-Disclosure of Confidential Information**. During the term of this Agreement, either party may disclose (the "Disclosing Party") Confidential Information to the other party (the "Receiving Party"). The Receiving Party: (a) shall hold the Disclosing Party's Confidential Information in confidence; and (b) shall take all reasonable steps to prevent any unauthorized possession, use, copying, transfer or disclosure of such Confidential Information.

9.4.3 **Permitted Disclosure.** Notwithstanding the foregoing, the following disclosures of Confidential Information are allowed. Receiving Party shall endeavor to provide prior written notice to Disclosing Party of any permitted disclosure made pursuant to Section 9.4.3.2 or 9.4.3.3. Disclosing Party may seek a protective order, including without limitation, a temporary restraining order to prevent or contest such permitted disclosure; provided, however, that Disclosing Party shall seek such remedies at its sole expense. Neither party shall have any liability for such permitted disclosures:

9.4.3.1 Disclosure to employees, agents, contractors, subcontractors or other representatives of Receiving Party that have a need to know in connection with this Agreement.

9.4.3.2 Disclosure in response to a valid order of a court, government or regulatory agency or as may otherwise be required by law; and

9.4.3.3 Disclosure by Agency in response to a request pursuant to the California Public Records Act.

9.4.4 **Handling of Confidential Information**. Upon conclusion or termination of the Agreement, Receiving Party shall return to Disclosing Party or destroy Confidential Information (including all copies thereof), if requested by Disclosing Party in writing. Notwithstanding the foregoing, the Receiving Party may retain copies of such Confidential Information, subject to the confidentiality provisions of this Agreement: (a) for archival purposes in its computer system; (b) in its legal department files; and (c) in files of Receiving Party's representatives where such copies are necessary to comply with applicable law. Party shall not disclose the Disclosing Party's Information to any person other than those of the Receiving Party's employees, agents, consultants, contractors and subcontractors who have a need to know in connection with this Agreement.

Section 10. PROJECT SITE.

10.1 Operations at the Project Site. Each Project site may include the power plant areas, all buildings, offices, and other locations where Work is to be performed, including any access roads. Contractor shall perform the Work in such a manner as to cause a minimum of interference with the operations of the Agency; if applicable, the entity for which Contractor is performing the Work, as referenced in Section 1.4; and other contractors at the Project site and to protect all persons and property thereon from damage or injury. Upon completion of the Work at a Project site, Contractor shall leave such Project site clean and free of all tools, equipment, waste materials and rubbish, stemming from or relating to Contractor's Work.

10.2 Contractor's Equipment, Tools, Supplies and Materials. Contractor shall be solely responsible for the transportation, loading and unloading, and storage of any equipment, tools, supplies or materials required for performing the Work, whether owned, leased or rented. Neither Agency nor, if applicable, the entity for which Contractor is performing the Work, as referenced in Section 1.4, will be responsible for any such equipment, supplies or materials which may be lost, stolen or damaged or for any additional rental charges for such. Equipment, tools, supplies and materials left or stored at a Project site, with or without permission, is at Contractor's sole risk. Anything left on the Project site an unreasonable length of time after the Work is completed shall be presumed to have been abandoned by the Contractor. Any transportation furnished by Agency or, if applicable, the entity for which Contractor is performing the Work, as referenced in Section 1.4, shall be solely as an accommodation and neither Agency nor, if applicable, the entity for which Contractor is performing the Work, as referenced in Section 1.4, shall have liability therefor. Contractor shall assume the risk and is solely responsible for its owned, non-owned and hired automobiles, trucks or other motorized vehicles as well as any equipment, tools, supplies, materials or other property which is utilized by Contractor on the Project site. All materials and supplies used by Contractor in the Work shall be new and in good condition.

10.3 Use of Agency Equipment. Contractor shall assume the risk and is solely responsible for its use of any equipment owned and property provided by Agency and, if applicable, the entity for which Contractor is performing the Work, as referenced in Section 1.4, for the performance of Work.

Section 11. WARRANTY.

11.1 Nature of Work. In addition to any and all warranties provided or implied by law or public policy, Contractor warrants that all Work shall be free from defects in design and workmanship, and that Contractor shall perform all Work in accordance with applicable federal, state, and local laws, rules and regulations including engineering, construction and other codes and standards and prudent electrical utility standards, and in accordance with the terms of this Agreement.

11.2 **Deficiencies in Work.** In addition to all other rights and remedies which Agency may have, Agency shall have the right to require, and Contractor shall be obligated at its own expense to perform, all further Work which may be required to correct any deficiencies which result from Contractor's failure to perform any Work in accordance with the standards required by this Agreement. If during the term of this Agreement or the one (1) year period following completion of the Work, any equipment, supplies or other materials or Work used or provided by Contractor under this Agreement fails due to defects in material and/or workmanship or other breach of this Agreement, Contractor shall, upon any reasonable written notice from Agency, replace or repair the same to Agency's satisfaction.

11.3 **Assignment of Warranties.** Contractor hereby assigns to Agency all additional warranties, extended warranties, or benefits like warranties, such as insurance, provided by or reasonably obtainable from suppliers of equipment and material used in the Work.

Section 12. **HEALTH AND SAFETY PROGRAMS.** The Contractor shall establish, maintain, and enforce safe work practices, and implement an accident/incident prevention program intended to ensure safe and healthful operations under their direction. The program shall include all requisite components of such a program under Federal, State and local regulations and shall comply with all site programs established by Agency and, if applicable, the entity for which Contractor is performing the Work, as referenced in Section 1.4.

12.1 Contractor is responsible for acquiring job hazard assessments as necessary to safely perform the Work and provide a copy to Agency upon request.

12.2 Contractor is responsible for providing all employee health and safety training and personal protective equipment in accordance with potential hazards that may be encountered in performance of the Work and provide copies of the certified training records upon request by Agency. Contractor shall be responsible for proper maintenance and/or disposal of their personal protective equipment and material handling equipment.

12.3 Contractor is responsible for ensuring that its lower-tier subcontractors are aware of and will comply with the requirements set forth herein.

12.4 Agency, or its representatives, may periodically monitor the safety performance of the Contractor performing the Work. Contractors and its subcontractors shall be required to comply with the safety and health obligations as established in the Agreement. Non-compliance with safety, health, or fire requirements may result in cessation of work activities, until items in non-compliance are corrected. It is also expressly acknowledged, understood and agreed that no payment shall be due from Agency to Contractor under this Agreement at any time when, or for any Work performed when, Contractor is not in full compliance with this Section 12.

12.5 Contractor shall immediately report any injuries to the Agency site safety representative. Additionally, the Contractor shall investigate and submit to the Agency site safety representative copies of all written accident reports, and coordinate with Agency if further investigation is requested.

12.6 Contractor shall take all reasonable steps and precautions to protect the health of its employees and other site personnel with regard to the Work. Contractor shall conduct occupational health monitoring and/or sampling to determine levels of exposure of its employees to hazardous or toxic substances or environmental conditions. Copies of any sampling results will be forwarded to the Agency site safety representative upon request.

12.7 Contractor shall develop a plan to properly handle and dispose of any hazardous wastes, if any, Contractor generates in performing the Work.

12.8 Contractor shall advise its employees and subcontractors that any employee who jeopardizes his/her safety and health, or the safety and health of others, may be subject to actions including removal from Work.

12.9 Contractor shall, at the sole option of the Agency, develop and provide to the Agency a Hazardous Material Spill Response Plan that includes provisions for spill containment and clean-up, emergency contact information including regulatory agencies and spill sampling and analysis procedures. Hazardous Materials shall include diesel fuel used for trucks owned or leased by the Contractor.

12.10 If Contractor is providing Work to an Agency Member, SCPPA or SCPPA member (collectively "Member" solely for the purpose of this section) pursuant to Section 1.4 hereof, then that Member shall have the same rights as the Agency under Sections 12.1, 12.2, 12.4, 12.5, and 12.6 hereof.

Section 13. MISCELLANEOUS PROVISIONS.

13.1 **Attorneys' Fees.** If a party to this Agreement brings any action, including an action for declaratory relief, to enforce or interpret the provision of this Agreement, the prevailing party shall be entitled to reasonable attorneys' fees in addition to any other relief to which that party may be entitled. The court may set such fees in the same action or in a separate action brought for that purpose.

13.2 **Venue.** In the event that either party brings any action against the other under this Agreement, the Parties agree that trial of such action shall be vested exclusively in the state courts of California in the County of Placer or in the United States District Court for the Eastern District of California.

13.3 **Severability.** If a court of competent jurisdiction finds or rules that any provision of this Agreement is invalid, void, or unenforceable, the provisions of this Agreement not so adjudged shall remain in full force and effect. The invalidity in

whole or in part of any provision of this Agreement shall not void or affect the validity of any other provision of this Agreement.

13.4 **No Implied Waiver of Breach.** The waiver of any breach of a specific provision of this Agreement does not constitute a waiver of any other breach of that term or any other term of this Agreement.

13.5 **Successors and Assigns.** The provisions of this Agreement shall inure to the benefit of and shall apply to and bind the successors and assigns of the Parties.

13.6 **Conflict of Interest.** Contractor may serve other clients, but none whose activities within the corporate limits of Agency or whose business, regardless of location, would place Contractor in a "conflict of interest," as that term is defined in the Political Reform Act, codified at California Government Code Section 81000 *et seq.*

Contractor shall not employ any Agency official in the work performed pursuant to this Agreement. No officer or employee of Agency shall have any financial interest in this Agreement that would violate California Government Code Sections 1090 *et seq.*

13.7 **Contract Administrator.** This Agreement shall be administered by Joel Ledesma, Assistant General Manager, or his/her designee, who shall act as the Agency's representative. All correspondence shall be directed to or through the representative.

13.8 **Notices.** Any written notice to Contractor shall be sent to:

Cisco Air Systems, Inc.
Attention: Kent Frkovich
214 27th Street
Sacramento, CA 95816

Any written notice to Agency shall be sent to:

Randy S. Howard
General Manager
Northern California Power Agency
651 Commerce Drive
Roseville, CA 95678

With a copy to:

Jane E. Luckhardt
General Counsel
Northern California Power Agency
651 Commerce Drive
Roseville, CA 95678

13.9 **Professional Seal.** Where applicable in the determination of the Agency, the first page of a technical report, first page of design specifications, and each page of construction drawings shall be stamped/sealed and signed by the licensed professional responsible for the report/design preparation.

13.10 **Integration; Incorporation.** This Agreement, including all the exhibits attached hereto, represents the entire and integrated agreement between Agency and Contractor and supersedes all prior negotiations, representations, or agreements, either written or oral. All exhibits attached hereto are incorporated by reference herein.

13.11 **Alternative Dispute Resolution**. If any dispute arises between the Parties that cannot be settled after engaging in good faith negotiations, Agency and Contractor agree to resolve the dispute in accordance with the following:

13.11.1 Each party shall designate a senior management or executive level representative to negotiate any dispute;

13.11.2 The representatives shall attempt, through good faith negotiations, to resolve the dispute by any means within their authority.

13.11.3 If the issue remains unresolved after fifteen (15) days of good faith negotiations, the Parties shall attempt to resolve the disagreement by negotiation between legal counsel. If the above process fails, the Parties shall resolve any remaining disputes through mediation to expedite the resolution of the dispute.

13.11.4 The mediation process shall provide for the selection within fifteen (15) days by both Parties of a disinterested third person as mediator, shall be commenced within thirty (30) days and shall be concluded within fifteen (15) days from the commencement of the mediation.

13.11.5 The Parties shall equally bear the costs of any third party in any alternative dispute resolution process.

13.11.6 The alternative dispute resolution process is a material condition to this Agreement and must be exhausted as an administrative remedy prior to either Party initiating legal action. This alternative dispute resolution process is not intended to nor shall be construed to change the time periods for filing a claim or action specified by Government Code §§ 900 *et seq.*

13.12 **Controlling Provisions.** In the case of any conflict between the terms of this Agreement and the Exhibits hereto, a Purchase Order, or Contractor's Proposal (if any), the Agreement shall control. In the case of any conflict between the Exhibits hereto and a Purchase Order or the Contractor's Proposal, the Exhibits shall control. In the case of any conflict between the terms of a Purchase Order and the Contractor's Proposal, the Purchase Order shall control.

13.13 Counterparts. This Agreement may be executed in multiple counterparts, each of which shall be an original and all of which together shall constitute one agreement.

13.14 Construction of Agreement. Each party hereto has had an equivalent opportunity to participate in the drafting of the Agreement and/or to consult with legal counsel. Therefore, the usual construction of an agreement against the drafting party shall not apply hereto.

13.15 No Third Party Beneficiaries. This Agreement is made solely for the benefit of the parties hereto, with no intent to benefit any non-signator third parties. However, should Contractor provide Work to an Agency member, SCPPA or SCPPA member (collectively for the purpose of this section only "Member") pursuant to Section 1.4, the parties recognize that such Member may be a third party beneficiary solely as to the Purchase Order and Requested Work relating to such Member.

The Parties have executed this Agreement as of the date signed by the Agency.

NORTHERN CALIFORNIA POWER AGENCY	CISCO AIR SYSTEMS, INC.
Date_____	Date_____
_____	_____
RANDY S. HOWARD,	**KENT FRKOVICH,**
General Manager	President

Attest:

_____
Assistant Secretary of the Commission

Approved as to Form:

_____
Jane E. Luckhardt, General Counsel

EXHIBIT A

SCOPE OF WORK

Cisco Air Systems, Inc. ("Contractor") shall provide specialized OEM air compressor maintenance and services as requested by the Northern California Power Agency ("Agency") at any facilities owned or operated by Agency, NCPA Members, Southern California Public Power Authority ("SCPPA") or SCPPA members.

NCPA CT Facilities specific scope of work:

LEC ZT145 and Ri160 Air Compressors, Years 1-3 of Agreement:

1. **EQUIPMENT SCOPE.** This PackageCare Agreement is for "All inclusive" preventative maintenance, service & warranty for the equipment set forth below ("Equipment") based on the total annual operating hours listed ("Annual Operating Hours").

Mfg	Model	Serial	Description	Mfg Year	Start-up Date	Annual Operating Hours	PM Services Per Year
Atlas Copco	ZT145	APF162045	200 HP - Oil Free Air Compressor	2012	2012	6000	2
Atlas Copco	ZT145	APF164682	200 HP - Oil Free Air Compressor	2012	2012	6000	2
Ingersoll Rand	R160i	V1535U12158	215 HP Air Compressor	2012	2012	4000	2

2. **PRIORITY SERVICE.** All customers signed up on a PackageCare Service Plan will receive priority service response & scheduling.

3. **SERVICE.** The PackageCare Service Plan will be performed in accordance with the maintenance schedule specific to the Equipment set forth above and recommended by the original equipment manufacturer (OEM). Coverage includes all factory package mounted components. Repairs that are required as a result of misuse, improper maintenance by anyone other than Cisco Air Systems certified technicians, abuse or other factors beyond Cisco Air Systems' control are not covered by this agreement. Exclusions include damage resulting from accidents, transportation, failure or fluctuation of electrical power, telephone equipment or communication line failure, failure of foreign interconnected equipment or other software or equipment, improper use, strikes, riots, vandalism, acts of war, nuclear disaster, or natural causes such as fire, flood, water, wind, earthquake or other Acts of God.

4. **SCOPE OF WORK.** PackageCare preventative maintenance service visits will be scheduled based off of the site conditions and the annual operating hours. During each PM service visit, a Cisco Air Systems factory trained Ingersoll Rand service technician will complete the following:

- Replace all Genuine Ingersoll Rand consumable parts based on operating hours & unit condition
  - Air filters, oil filters, cabinet filters, PDM filters, separators and lubricant
- Perform clean & inspection
- Perform any Ingersoll Rand service updates or warranty campaigns
- Perform lubricant samples
- Perform vibration analysis (SPM)
- Inspect all air treatment equipment

Quarterly Price Not Including Sales Tax	**$8,285.00**

LEC ZT145 and Ri160 Air Compressors, Years 4-5 of Agreement:

Brand	Model	Serial	HP	Year	Annual Hrs	Services Per Year
Atlas Copco	ZT145	APF162045	200	2012	6,000	2
Atlas Copco	ZT145	APF164682	200	2012	6,000	2
Ingersoll Rand	R160i	V1535U12158	215	2012	4,000	2

This Service Plan agreement is a comprehensive preventative maintenance (PM) program:

- **Minor Preventative Maintenance Service Every – (6) Months for all 3 units**
  - Replace air/oil filters
  - Replace cabinet filters
  - Take lubricant sample
  - Take SPM readings
  - Perform comprehensive air compressor, air treatment and room inspection
  - Advise of any issues
- **Major Preventative Maintenance Service Every – (12) Months for ZT145's**
  - Same as the above service **(24) Months for R160i**
  - Replace air/oil separator (R160i)
  - Replace lubricant
  - Advise of any issues

Quarterly Price: $6,435.00 + Applicable Sales Tax

LEC CD350+ Air Compressors:

Brand	Model	Serial	HP	Year	Annual Hrs	Services Per Year
Atlas Copco	CD350+	US0585711	-	-	-	1
Atlas Copco	CD350+	US0585710	-	-	-	1

This Service Plan agreement is a comprehensive preventative maintenance (PM) program:

- **Dryer Preventative Maintenance Service Every – (12) Months**
  - Replace DD390 filter elements (qty 4, per dryer)
  - Replace PD390 filter elements (qty 2, per dryer)
  - Replace oring filter housings (qty 6, per dryer)
  - Take desiccant sample
  - Advise of any issues
- ***Dryer w/ Desiccant Preventative Maintenance Service**
  - Replace DD390 filter elements (qty 4, per dryer)
  - Replace PD390 filter elements (qty 2, per dryer)
  - Replace oring filter housings (qty 6, per dryer)
  - Replace pilot air filter
  - Replace mufflers
  - Replace desiccant
  - Advise of any issues

*Desiccant change for dryers to happen once throughout 5-year service plan

Quarterly Price: $3,310.00 + Applicable Sales Tax

CT2 ZT18 Air Compressor:

Brand	Model	Serial	HP	Year	Annual Hrs	Services Per Year
Atlas Copco	ZT18FF	AII704258	40	2005	1,000	2

This Service Plan agreement is a comprehensive preventative maintenance (PM) program:

- **Inspection Preventative Maintenance Service Every – (6) Months**
  - Take lubricant sample
  - Take SPM readings
  - Perform comprehensive air compressor, air treatment and room inspection
  - Advise of any issues

*Minor and major services will be quoted separately, on an as needed basis.

Quarterly Price: $520.00 + Applicable Sales Tax

EXHIBIT B

COMPENSATION SCHEDULE AND HOURLY FEES

Compensation for all work, including hourly fees and expenses, shall not exceed the amount set forth in Section 2 hereof. The hourly rates and or compensation break down and an estimated amount of expenses is as follows:

For CT Facilities specific pricing, please refer to Exhibit A.

Pricing for services to be performed at NCPA Member or SCPPA locations will be quoted at the time services are requested.

NOTE: As a public agency, NCPA shall not reimburse Contractor for travel, food and related costs in excess of those permitted by the Internal Revenue Service.

EXHIBIT C

CERTIFICATION

Affidavit of Compliance for Contractors

I,

_____

(Name of person signing affidavit)(Title)

do hereby certify that background investigations to ascertain the accuracy of the identity and employment history of all employees of

Cisco Air Systems, Inc.

(Company name)

for contract work at:

LODI ENERGY CENTER, 12745 N. THORNTON ROAD, LODI, CA 95242

(Project name and location)

have been conducted as required by the California Energy Commission Decision for the above-named project.

_____

(Signature of officer or agent)

Dated this _____ day of _____, 20 _____.

THIS AFFIDAVIT OF COMPLIANCE SHALL BE APPENDED TO THE PROJECT SECURITY PLAN AND SHALL BE RETAINED AT ALL TIMES AT THE PROJECT SITE FOR REVIEW BY THE CALIFORNIA ENERGY COMMISSION COMPLIANCE PROJECT MANAGER.

NOT APPLICABLE

EXHIBIT D

CERTIFICATION

Affidavit of Compliance for Hazardous Materials Transport Vendors

I, _____,

(Name of person signing affidavit)(Title)

do hereby certify that the below-named company has prepared and implemented security plans in conformity with 49 CFR 172, subpart I and has conducted employee background investigations in conformity with 49 CFR 172.802(a), as the same may be amended from time to time,

_____

(Company name)

for hazardous materials delivery to:

LODI ENERGY CENTER, 12745 N. THORNTON ROAD, LODI, CA 95242

(Project name and location)

as required by the California Energy Commission Decision for the above-named project.

_____

(Signature of officer or agent)

Dated this _____ day of _____, 20 __.

THIS AFFIDAVIT OF COMPLIANCE SHALL BE APPENDED TO THE PROJECT SECURITY PLAN AND SHALL BE RETAINED AT ALL TIMES AT THE PROJECT SITE FOR REVIEW BY THE CALIFORNIA ENERGY COMMISSION COMPLIANCE PROJECT MANAGER.

NOT APPLICABLE

EXHIBIT E

ATTACHMENT A [from MLA]
AGREEMENT TO BE BOUND

MAINTENANCE LABOR AGREEMENT ATTACHMENT
LODI ENERGY CENTER PROJECT

The undersigned hereby certifies and agrees that:

1) It is an Employer as that term is defined in Section 1.4 of the Lodi Energy Center Project Maintenance Labor Agreement ("Agreement" solely for the purposes of this Exhibit E) because it has been, or will be, awarded a contract or subcontract to assign, award or subcontract Covered Work on the Project (as defined in Section 1.2 and 2.1 of the Agreement), or to authorize another party to assign, award or subcontract Covered Work, or to perform Covered Work.

2) In consideration of the award of such contract or subcontract, and in further consideration of the promises made in the Agreement and all attachments thereto (a copy of which was received and is hereby acknowledged), it accepts and agrees to be bound by the terms and condition of the Agreement, together with any and all amendments and supplements now existing or which are later made thereto.

3) If it performs Covered Work, it will be bound by the legally established trust agreements designated in local master collective bargaining agreements, and hereby authorizes the parties to such local trust agreements to appoint trustees and successor trustee to administer the trust funds, and hereby ratifies and accepts the trustees so appointed as if made by the undersigned.

4) It has no commitments or agreements that would preclude its full and complete compliance with the terms and conditions of the Agreement.

5) It will secure a duly executed Agreement to be Bound, in form identical to this documents, from any Employer(s) at any tier or tiers with which it contracts to assign, award, or subcontract Covered Work, or to authorize another party to assign, award or subcontract Covered Work, or to perform Covered Work.

DATED: _____ Name of Employer _____

_____
(Authorized Officer & Title)

_____

_____
(Address)

_____

16

Commission Staff Report

COMMISSION MEETING DATE: August 26, 2021

SUBJECT: Dee's Design Box, LLC. – Five Year Multi-Task Consulting Services Agreement for Graphic Design Services; Applicable to the following: All Northern California Power Agency (NCPA), NCPA Members, Southern California Public Power Authority (SCPPA), and SCPPA Members

AGENDA CATEGORY: Consent

FROM:	Jane Cirrincione JDC	**METHOD OF SELECTION:**
	Assistant General Manager	*Competitive Pricing Process*
Division:	Legislative & Regulatory Affairs	*If other, please describe:*
Department:	Legislative & Regulatory	

IMPACTED MEMBERS:

All Members	☒	**City of Lodi**	☐	**City of Shasta Lake**	☐
Alameda Municipal Power	☐	**City of Lompoc**	☐	**City of Ukiah**	☐
San Francisco Bay Area Rapid Transit	☐	**City of Palo Alto**	☐	**Plumas-Sierra REC**	☐
City of Biggs	☐	**City of Redding**	☐	**Port of Oakland**	☐
City of Gridley	☐	**City of Roseville**	☐	**Truckee Donner PUD**	☐
City of Healdsburg	☐	**City of Santa Clara**	☐	**Other**	☐

If other, please specify _____

_____

RECOMMENDATION:

Approve Resolution 21-79 authorizing the General Manager or his designee to enter into a Multi-Task Consulting Services Agreement with Dee's Design Box, LLC. for graphic design services, with any non-substantial changes recommended and approved by the NCPA General Counsel, which shall not exceed $250,000 over five years, for use by NCPA, NCPA Members, by SCPPA, and SCPPA Members.

BACKGROUND:

Graphic design services are required from time to time by NCPA, NCPA Members, SCPPA, and SCPPA Members. Participants in NCPA's Customer Programs Working Groups requested assistance in contracting for graphic design services as part of the NCPA strategic planning process, and as a result this objective was incorporated into the agency-wide strategic plan approved by the NCPA Commission on April 29, 2021.

NCPA issued a Request for Proposal (RFP) LR 2102 on June 3, 2021, to solicit proposals from qualified consultants providing graphic design services. NCPA created a review group for the RFP consisting of NCPA staff and staff from NCPA Member entities, and this review group evaluated and scored timely proposals submitted to the RFP. Nine vendors responded to the RFP by the deadline of June 25, 2021. Based on the scoring review group's evaluation, three vendors were selected to provide graphic design services.

The review group selected Dee's Design Box, LLC. based on its experience and costs. NCPA has utilized this vendor in the past, and has a good working relationship with this firm. NCPA is also entering into agreements with Background Stories Co and Pat Davis Design Group, Inc. for similar services.

FISCAL IMPACT:

Upon execution, the total cost of the agreement is not to exceed $250,000 over five years. Purchase orders referencing the terms and conditions of the agreement will be issued following NCPA procurement policies and procedures.

SELECTION PROCESS:

Three vendors were selected as a result of an RFP process in accordance with NCPA's procurement policies and procedures. An RFP was posted on NCPA's website June 3, 2021, to June 25, 2021. A total of nine responses were received and evaluated based on: 1. Quality and completeness of proposal; 2. Knowledge, experience and skills to provide the requested services; 3. Experience of staff to be assigned to the project, based on prior engagements of similar scope and complexity; 4. Competitive rates for the requested services; 5. Demonstrated strong project management; and 6. Customer references. The selection process was completed by NCPA along with Alameda Municipal Power and the City of Lodi.

This enabling agreement does not commit NCPA to any expenditure of funds. NCPA will issue purchase orders based on cost and availability of the services needed at the time the service is required.

ENVIRONMENTAL ANALYSIS:

This activity would not result in a direct or reasonably foreseeable indirect change in the physical environment and is therefore not a "project" for purposes of Section 21065 of the California Environmental Quality Act. No environmental review is necessary.

COMMITTEE REVIEW:

Pending Legislative & Regulatory Affairs Committee review and approval during its regularly scheduled meeting on August 25, 2021.

Respectfully submitted,

RANDY S. HOWARD
General Manager

Attachments (2):

- Resolution 21-79
- Multi-Task Consulting Services Agreement with Dee's Design Box, LLC.

SR: 202:21

RESOLUTION 21-79

RESOLUTION OF THE NORTHERN CALIFORNIA POWER AGENCY APPROVING A MULTI-TASK CONSULTING SERVICES AGREEMENT WITH DEE'S DESIGN BOX, LLC.

(reference Staff Report #202:21)

WHEREAS, graphic design services are required from time to time by the Northern California Power Agency (NCPA), NCPA Members, by the Southern California Public Power Authority (SCPPA), and SCPPA Members; and

WHEREAS, Dee's Design Box, LLC. is a provider of these services; and

WHEREAS, the NCPA Commission has reviewed the Multi-Task Consulting Services Agreement with Dee's Design Box, LLC. to provide such services as needed at any facilities owned and/or operated by NCPA, NCPA Members, by SCPPA, and SCPPA Members; and

WHEREAS, several vendors were selected as a result of a request for proposal process in accordance with NCPA's procurement policies and procedures; and

WHEREAS, this activity would not result in a direct or reasonably foreseeable indirect change in the physical environment and is therefore not a "project" for purposes of Section 21065 of the California Environmental Quality Act. No environmental review is necessary; and

NOW, THEREFORE BE IT RESOLVED, that the Commission of the Northern California Power Agency authorizes the General Manager or his designee to enter into a Multi-Task Consulting Services Agreement, with any non-substantial changes as approved by the NCPA General Counsel, which shall not exceed $250,000 over five years, for use by NCPA, NCPA Members, by SCPPA, and SCPPA Members.

PASSED, ADOPTED and APPROVED this ____ day of _____, 2021 by the following vote on roll call:

	Vote	Abstained	Absent
Alameda			
San Francisco BART			
Biggs			
Gridley			
Healdsburg			
Lodi			
Lompoc			
Palo Alto			
Port of Oakland			
Redding			
Roseville			
Santa Clara			
Shasta Lake			
Truckee Donner			
Ukiah			
Plumas-Sierra			

_____
DAVID HAGELE
CHAIR

ATTEST:

_____
CARY A. PADGETT
ASSISTANT SECRETARY

MULTI-TASK CONSULTING SERVICES AGREEMENT BETWEEN THE NORTHERN CALIFORNIA POWER AGENCY AND DEE'S DESIGN BOX, LLC

This Consulting Services Agreement ("Agreement') is made by and between the Northern California Power Agency, a joint powers agency with its main office located at 651 Commerce Drive, Roseville, CA 95678-6420 ("Agency") and Dee's Design Box, LLC, a sole proprietorship with its office located at 125 Kensington Drive, Youngsville, NC 27596 ("Consultant") (together sometimes referred to as the "Parties") as of _____, 2021 ("Effective Date") in Roseville, California.

Section 1. SERVICES. Subject to the terms and conditions set forth in this Agreement, Consultant shall provide to Agency the services described in the Scope of Services attached hereto as Exhibit A and incorporated herein ("Services"), at the time and place and in the manner specified therein.

1.1 Term of Agreement. The term of this Agreement shall begin on the Effective Date and shall end when Consultant completes the Services, or no later than five (5) years from the date this Agreement was signed by Agency, whichever is shorter.

1.2 Standard of Performance. Consultant shall perform the Services in the manner and according to the standards observed by a competent practitioner of the profession in which Consultant is engaged and for which Consultant is providing the Services. Consultant represents that it is licensed, qualified and experienced to provide the Services set forth herein.

1.3 Assignment of Personnel. Consultant shall assign only competent personnel to perform the Services. In the event that Agency, in its sole discretion, at any time during the term of this Agreement, requests the reassignment of any such personnel, Consultant shall, immediately upon receiving written notice from Agency of such request, reassign such personnel.

1.4 Services Provided. Services provided under this Agreement by Consultant may include Services directly to the Agency or, as requested by the Agency and consistent with the terms of this Agreement, to Agency members, Southern California Public Power Authority ("SCPPA") or SCPPA members.

1.5 Request for Services. At such time that Agency determines to use Consultant's Services under this Agreement, Agency shall issue a Purchase Order. The Purchase Order shall identify the specific services to be performed ("Requested Services"), may include a not-to-exceed monetary cap on Requested Services and expenditures authorized by that Purchase Order, and a time by which the Requested Services shall be completed. Consultant shall have seven calendar days from the date of the Agency's issuance of the Purchase Order in which to respond in writing that Consultant chooses not to perform the Requested Services. If Consultant agrees to perform the Requested Services, begins to perform the Requested Services, or does not respond within the seven day

period specified, then Consultant will have agreed to perform the Requested Services on the terms set forth in the Purchase Order, this Agreement and its Exhibits.

Section 2. COMPENSATION. Agency hereby agrees to pay Consultant an amount **NOT TO EXCEED** Two Hundred Fifty Thousand dollars ($250,000) for the Services, which shall include all fees, costs, expenses and other reimbursables, as set forth in Consultant's fee schedule, attached hereto and incorporated herein as Exhibit B. This dollar amount is not a guarantee that Agency will pay that full amount to the Consultant, but is merely a limit of potential Agency expenditures under this Agreement.

2.1 Invoices. Consultant shall submit invoices, not more often than once a month during the term of this Agreement, based on the cost for services performed and reimbursable costs incurred prior to the invoice date. Invoices shall contain the following information:

- The beginning and ending dates of the billing period;
- Services performed;
- The Purchase Order number authorizing the Services;
- At Agency's option, the total number of hours of work performed under the Agreement by Consultant and each employee, agent, and subcontractor of Consultant performing services hereunder; and
- At Agency's option, when the Consultant's Scope of Work identifies tasks, for each work item in each task, a copy of the applicable time entries showing the name of the person doing the work, the hours spent by each person, a brief description of the work, and each reimbursable expense, with supporting documentation, to Agency's reasonable satisfaction.

Invoices shall be sent to:

Northern California Power Agency
651 Commerce Drive
Roseville, California 95678
Attn: Accounts Payable
AcctsPayable@ncpa.com

2.2 Monthly Payment. Agency shall make monthly payments, based on invoices received, for services satisfactorily performed, and for authorized reimbursable costs incurred. Agency shall have thirty (30) days from the receipt of an invoice that complies with all of the requirements above to pay Consultant.

2.3 Payment of Taxes. Consultant is solely responsible for the payment of all federal, state and local taxes, including employment taxes, incurred under this Agreement.

2.4 **Authorization to Perform Services.** The Consultant is not authorized to perform any Services or incur any costs whatsoever under the terms of this Agreement until receipt of written authorization from the Contract Administrator.

2.5 **Timing for Submittal of Final Invoice.** Consultant shall have ninety (90) days after completion of its Services to submit its final invoice for the Requested Services. In the event Consultant fails to submit an invoice to Agency for any amounts due within the ninety (90) day period, Consultant is deemed to have waived its right to collect its final payment from Agency.

Section 3. FACILITIES AND EQUIPMENT. Except as set forth herein, Consultant shall, at its sole cost and expense, provide all facilities and equipment that may be necessary to perform the Services.

Section 4. INSURANCE REQUIREMENTS. Before beginning any work under this Agreement, Consultant, at its own cost and expense, shall procure the types and amounts of insurance listed below and shall maintain the types and amounts of insurance listed below for the period covered by this Agreement.

4.1 **Workers' Compensation.** If Consultant employs any person, Consultant shall maintain Statutory Workers' Compensation Insurance and Employer's Liability Insurance for any and all persons employed directly or indirectly by Consultant with limits of not less than one million dollars ($1,000,000.00) per accident.

4.2 **Commercial General and Automobile Liability Insurance.**

4.2.1 **Commercial General Insurance.** Consultant shall maintain commercial general liability insurance for the term of this Agreement, including products liability, covering any loss or liability, including the cost of defense of any action, for bodily injury, death, personal injury and broad form property damage which may arise out of the operations of Consultant. The policy shall provide a minimum limit of $2,000,000 per occurrence/$2,000,000 aggregate. Commercial general coverage shall be at least as broad as ISO Commercial General Liability form CG 0001 (current edition) on "an occurrence" basis covering comprehensive General Liability, with a self-insured retention or deductible of no more than $100,000. No endorsement shall be attached limiting the coverage.

4.2.2 **Automobile Liability.** Consultant shall maintain automobile liability insurance form CA 0001 (current edition) for the term of this Agreement covering any loss or liability, including the cost of defense of any action, arising from the operation, maintenance or use of any vehicle (symbol 1), whether or not owned by the Consultant, on or off Agency premises. The policy shall provide a minimum limit of $1,000,000 per each accident, with a self-insured retention or deductible of no more than $100,000. This insurance shall provide contractual liability covering all motor vehicles and

mobile equipment to the extent coverage may be excluded from general liability insurance.

4.2.3 General Liability/Umbrella Insurance. The coverage amounts set forth above may be met by a combination of underlying and umbrella policies as long as in combination the limits equal or exceed those stated.

4.3 Professional Liability Insurance. Not Applicable.

4.4 All Policies Requirements.

4.4.1 Verification of coverage. Prior to beginning any work under this Agreement, Consultant shall provide Agency with (1) a Certificate of Insurance that demonstrates compliance with all applicable insurance provisions contained herein and (2) policy endorsements to the policies referenced in Section 4.2, adding the Agency as an additional insured and declaring such insurance primary in regard to work performed pursuant to this Agreement.

4.4.2 Notice of Reduction in or Cancellation of Coverage. Consultant shall provide at least thirty (30) days prior written notice to Agency of any reduction in scope or amount, cancellation, or modification adverse to Agency of the policies referenced in Section 4.

4.4.3 Higher Limits. If Consultant maintains higher limits than the minimums specified herein, the Agency shall be entitled to coverage for the higher limits maintained by the Consultant.

4.4.4 Additional Certificates and Endorsements. If Consultant provides services to Agency members, SCPPA, and/or SCPPA members pursuant to this Agreement, Consultant shall provide certificates of insurance and policy endorsements, as referenced in Section 4.4.1, naming the specific Agency member, SCPPA or SCPPA member.

4.4.5 Waiver of Subrogation. Consultant agrees to waive subrogation which any insurer of Consultant may acquire from Consultant by virtue of the payment of any loss. Consultant agrees to obtain any endorsement that may be necessary to effect this waiver of subrogation. In addition, the Workers' Compensation policy shall be endorsed with a waiver of subrogation in favor of Agency for all work performed by Consultant, its employees, agents and subcontractors.

4.5 Consultant's Obligation. Consultant shall be solely responsible for ensuring that all equipment, vehicles and other items utilized in the performance of Services are operated, provided or otherwise utilized in a manner that ensues they are and remain covered by the policies referenced in Section 4 during this Agreement. Consultant shall also ensure that all workers involved in the

provision of Services are properly classified as employees, agents or independent contractors and are and remain covered by any and all workers' compensation insurance required by applicable law during this Agreement.

Section 5. INDEMNIFICATION AND CONSULTANT'S RESPONSIBILITIES.

5.1 Effect of Insurance. Agency's acceptance of insurance certificates and endorsements required under this Agreement does not relieve Consultant from liability under this indemnification and hold harmless clause. This indemnification and hold harmless clause shall apply to any damages or claims for damages whether or not such insurance policies shall have been determined to apply. By execution of this Agreement, Consultant acknowledges and agrees to the provisions of this Section and that it is a material element of consideration.

5.2 Scope. Consultant shall indemnify, defend with counsel reasonably acceptable to the Agency, and hold harmless the Agency, and its officials, commissioners, officers, employees, agents and volunteers from and against all losses, liabilities, claims, demands, suits, actions, damages, expenses, penalties, fines, costs (including without limitation costs and fees of litigation), judgments and causes of action of every nature arising out of or in connection with any acts or omissions by Consultant, its officers, officials, agents, and employees, except as caused by the sole or gross negligence of Agency. Notwithstanding, should this Agreement be construed as a construction agreement under Civil Code section 2783, then the exception referenced above shall also be for the active negligence of Agency.

Section 6. STATUS OF CONSULTANT.

6.1 Independent Contractor. Consultant is an independent contractor and not an employee of Agency. Agency shall have the right to control Consultant only insofar as the results of Consultant's Services and assignment of personnel pursuant to Section 1; otherwise, Agency shall not have the right to control the means by which Consultant accomplishes Services rendered pursuant to this Agreement. Notwithstanding any other Agency, state, or federal policy, rule, regulation, law, or ordinance to the contrary, Consultant and any of its employees, agents, and subcontractors providing services under this Agreement shall not qualify for or become entitled to, and hereby agree to waive any and all claims to, any compensation, benefit, or any incident of employment by Agency, including but not limited to eligibility to enroll in the California Public Employees Retirement System (PERS) as an employee of Agency and entitlement to any contribution to be paid by Agency for employer contributions and/or employee contributions for PERS benefits.

Consultant shall indemnify, defend, and hold harmless Agency for the payment of any employee and/or employer contributions for PERS benefits on behalf of Consultant or its employees, agents, or subcontractors, as well as for the payment of any penalties and interest on such contributions, which would otherwise be the responsibility of Agency. Consultant and Agency acknowledge

and agree that compensation paid by Agency to Consultant under this Agreement is based upon Consultant's estimated costs of providing the Services, including salaries and benefits of employees, agents and subcontractors of Consultant.

Consultant shall indemnify, defend, and hold harmless Agency from any lawsuit, administrative action, or other claim for penalties, losses, costs, damages, expense and liability of every kind, nature and description that arise out of, pertain to, or relate to such claims, whether directly or indirectly, due to Consultant's failure to secure workers' compensation insurance for its employees, agents, or subcontractors.

Consultant agrees that it is responsible for the provision of group healthcare benefits to its fulltime employees under 26 U.S.C. § 4980H of the Affordable Care Act. To the extent permitted by law, Consultant shall indemnify, defend and hold harmless Agency from any penalty issued to Agency under the Affordable Care Act resulting from the performance of the Services by any employee, agent, or subcontractor of Consultant.

6.2 **Consultant Not Agent.** Except as Agency may specify in writing, Consultant shall have no authority, express or implied, to act on behalf of Agency in any capacity whatsoever as an agent. Consultant shall have no authority, express or implied, pursuant to this Agreement to bind Agency to any obligation whatsoever.

6.3 **Assignment and Subcontracting.** This Agreement contemplates personal performance by Consultant and is based upon a determination of Consultant's unique professional competence, experience, and specialized professional knowledge. A substantial inducement to Agency for entering into this Agreement was and is the personal reputation and competence of Consultant. Consultant may not assign this Agreement or any interest therein without the prior written approval of the Agency. Consultant shall not subcontract any portion of the performance contemplated and provided for herein, other than to the subcontractors identified in Exhibit A, without prior written approval of the Agency. Where written approval is granted by the Agency, Consultant shall supervise all work subcontracted by Consultant in performing the services and shall be responsible for all work performed by a subcontractor as if Consultant itself had performed such work. The subcontracting of any work to subcontractors shall not relieve Consultant from any of its obligations under this Agreement with respect to the services and Consultant is obligated to ensure that any and all subcontractors performing any services shall be fully insured in all respects and to the same extent as set forth under Section 4, to Agency's satisfaction.

Section 7. LEGAL REQUIREMENTS.

7.1 **Governing Law.** The laws of the State of California shall govern this Agreement.

7.2 **Compliance with Applicable Laws.** Consultant and its subcontractors and agents, if any, shall comply with all laws applicable to the performance of the work hereunder.

7.3 **Licenses and Permits.** Consultant represents and warrants to Agency that Consultant and its employees, agents, and subcontractors (if any) have and will maintain at their sole expense during the term of this Agreement all licenses, permits, qualifications, and approvals of whatever nature that are legally required to practice their respective professions.

Section 8. TERMINATION AND MODIFICATION.

8.1 **Termination.** Agency may cancel this Agreement at any time and without cause upon ten (10) days prior written notice to Consultant.

In the event of termination, Consultant shall be entitled to compensation for Services satisfactorily completed as of the effective date of termination; Agency, however, may condition payment of such compensation upon Consultant delivering to Agency any or all records or documents, as referenced in Section 9.1 hereof.

8.2 **Amendments.** The Parties may amend this Agreement only by a writing signed by all the Parties.

8.3 **Survival.** All obligations arising prior to the termination of this Agreement and all provisions of this Agreement allocating liability between Agency and Consultant shall survive the termination of this Agreement.

8.4 **Options upon Breach by Consultant.** If Consultant materially breaches any of the terms of this Agreement, including but not limited to those set forth in Section 4, Agency's remedies shall include, but not be limited to, the following:

8.4.1 Immediately terminate the Agreement;

8.4.2 Retain the plans, specifications, drawings, reports, design documents, and any other work product prepared by Consultant pursuant to this Agreement;

8.4.3 Retain a different consultant to complete the Services not finished by Consultant; and/or

8.4.4 Charge Consultant the difference between the costs to complete the Services that is unfinished at the time of breach and the amount that Agency would have paid Consultant pursuant hereto if Consultant had completed the Services.

Section 9. KEEPING AND STATUS OF RECORDS.

9.1 Records Created as Part of Consultant's Performance. All reports, data, maps, models, charts, studies, surveys, photographs, memoranda, plans, studies, specifications, records, files, or any other documents or materials, in electronic or any other form, that Consultant prepares or obtains pursuant to this Agreement and that relate to the matters covered hereunder shall be the property of the Agency. Consultant hereby agrees to deliver those documents to the Agency upon termination of the Agreement. Agency and Consultant agree that, unless approved by Agency in writing, Consultant shall not release to any non-parties to this Agreement any data, plans, specifications, reports and other documents.

9.2 Consultant's Books and Records. Consultant shall maintain any and all records or other documents evidencing or relating to charges for Services or expenditures and disbursements charged to the Agency under this Agreement for a minimum of three (3) years, or for any longer period required by law, from the date of final payment to the Consultant to this Agreement.

9.3 Inspection and Audit of Records. Any records or documents that this Agreement requires Consultant to maintain shall be made available for inspection, audit, and/or copying at any time during regular business hours, upon oral or written request of the Agency. Under California Government Code Section 8546.7, if the amount of public funds expended under this Agreement exceeds ten thousand dollars ($10,000.00), the Agreement shall be subject to the examination and audit of the State Auditor, at the request of Agency or as part of any audit of the Agency, for a period of three (3) years after final payment under the Agreement.

9.4 Confidential Information and Disclosure.

9.4.1 Confidential Information. The term "Confidential Information", as used herein, shall mean any and all confidential, proprietary, or trade secret information, whether written, recorded, electronic, oral or otherwise, where the Confidential Information is made available in a tangible medium of expression and marked in a prominent location as confidential, proprietary and/or trade secret information. Confidential Information shall not include information that: (a) was already known to the Receiving Party or is otherwise a matter of public knowledge, (b) was disclosed to Receiving Party by a third party without violating any confidentiality agreement, (c) was independently developed by Receiving Party without reverse engineering, as evidenced by written records thereof, or (d) was not marked as confidential Information in accordance with this section.

9.4.2 Non-Disclosure of Confidential Information. During the term of this Agreement, either party may disclose ("The Disclosing Party") confidential Information to the other party ("the Receiving Party"). The Receiving Party: (a) shall hold the Disclosing Party's Confidential Information in

confident; and (b) shall take all reasonable steps to prevent any unauthorized possession, use, copying, transfer or disclosure of such Confidential Information.

9.4.3 **Permitted Disclosure.** Notwithstanding the foregoing, the following disclosures of Confidential Information are allowed. Receiving Party shall endeavor to provide prior written notice to Disclosing Party of any permitted disclosure made pursuant to Section 9.4.3.2 or 9.4.3.3. Disclosing Party may seek a protective order, including without limitation, a temporary restraining order to prevent or contest such permitted disclosure; provided, however, that Disclosing Party shall seek such remedies at its sole expense. Neither party shall have any liability for such permitted disclosures:

9.4.3.1 Disclosure to employees, agents, consultants, contractors, subcontractors or other representatives of Receiving Party that have a need to know in connection with this Agreement.

9.4.3.2 Disclosure in response to a valid order of a court, government or regulatory agency or as may otherwise be required by law; and

9.4.3.3 Disclosure by Agency in response to a request pursuant to the California Public Records Act.

9.4.4 **Handling of Confidential Information**. Upon conclusion or termination of the Agreement, Receiving Party shall return to Disclosing Party or destroy Confidential Information (including all copies thereof), if requested by Disclosing Party in writing. Notwithstanding the foregoing, the Receiving Party may retain copies of such Confidential Information, subject to the confidentiality provisions of this Agreement: (a) for archival purposes in its computer system; (b) in its legal department files; and (c) in files of Receiving Party's representatives where such copies are necessary to comply with applicable law. Party shall not disclose the Disclosing Party's Information to any person other than those of the Receiving Party's employees, agents, consultants, contractors and subcontractors who have a need to know in connection with this Agreement.

Section 10. MISCELLANEOUS PROVISIONS.

10.1 **Attorneys' Fees.** If a party to this Agreement brings any action, including an action for declaratory relief, to enforce or interpret the provision of this Agreement, the prevailing party shall be entitled to reasonable attorneys' fees in addition to any other relief to which that party may be entitled. The court may set such fees in the same action or in a separate action brought for that purpose.

10.2 **Venue.** In the event that either party brings any action against the other under this Agreement, the Parties agree that trial of such action shall be vested exclusively in the state courts of California in the County of Placer or in the United States District Court for the Eastern District of California.

10.3 **Severability.** If a court of competent jurisdiction finds or rules that any provision of this Agreement is invalid, void, or unenforceable, the provisions of this Agreement not so adjudged shall remain in full force and effect. The invalidity in whole or in part of any provision of this Agreement shall not void or affect the validity of any other provision of this Agreement.

10.4 **No Implied Waiver of Breach.** The waiver of any breach of a specific provision of this Agreement does not constitute a waiver of any other breach of that term or any other term of this Agreement.

10.5 **Successors and Assigns.** The provisions of this Agreement shall inure to the benefit of and shall apply to and bind the successors and assigns of the Parties.

10.6 **Conflict of Interest.** Consultant may serve other clients, but none whose activities within the corporate limits of Agency or whose business, regardless of location, would place Consultant in a "conflict of interest," as that term is defined in the Political Reform Act, codified at California Government Code Section 81000 *et seq.*

Consultant shall not employ any Agency official in the work performed pursuant to this Agreement. No officer or employee of Agency shall have any financial interest in this Agreement that would violate California Government Code Sections 1090 *et seq.*

10.7 **Contract Administrator.** This Agreement shall be administered by Jane Cirrincione, Assistant General Manager, or his/her designee, who shall act as the Agency's representative. All correspondence shall be directed to or through the representative.

10.8 **Notices.** Any written notice to Consultant shall be sent to:

DeAne Norwood
Chief Executive Officer
Dee's Design Box
125 Kensington Drive
Youngsville, NC 27596

Any written notice to Agency shall be sent to:

Randy S. Howard
General Manager
Northern California Power Agency
651 Commerce Drive
Roseville, CA 95678

With a copy to:

Jane E. Luckhardt
General Counsel
Northern California Power Agency
651 Commerce Drive
Roseville, CA 95678

10.9 **Professional Seal.** Where applicable in the determination of the Agency, the first page of a technical report, first page of design specifications, and each page of construction drawings shall be stamped/sealed and signed by the licensed professional responsible for the report/design preparation.

10.10 **Integration; Incorporation.** This Agreement, including all the exhibits attached hereto, represents the entire and integrated agreement between Agency and Consultant and supersedes all prior negotiations, representations, or agreements, either written or oral. All exhibits attached hereto are incorporated by reference herein.

10.11 **Alternative Dispute Resolution**. If any dispute arises between the Parties that cannot be settled after engaging in good faith negotiations, Agency and Consultant agree to resolve the dispute in accordance with the following:

10.11.1 Each party shall designate a senior management or executive level representative to negotiate any dispute;

10.11.2 The representatives shall attempt, through good faith negotiations, to resolve the dispute by any means within their authority.

10.11.3 If the issue remains unresolved after fifteen (15) days of good faith negotiations, the Parties shall attempt to resolve the disagreement by negotiation between legal counsel. If the above process fails, the Parties shall resolve any remaining disputes through mediation to expedite the resolution of the dispute.

10.11.4 The mediation process shall provide for the selection within fifteen (15) days by both Parties of a disinterested third person as mediator, shall be commenced within thirty (30) days and shall be concluded within fifteen (15) days from the commencement of the mediation.

10.11.5 The Parties shall equally bear the costs of any third party in any alternative dispute resolution process.

10.11.6 The alternative dispute resolution process is a material condition to this Agreement and must be exhausted as an administrative prior to either Party initiating legal action. This alternative dispute resolution process is not intended to nor shall be construed to change the time periods for filing a claim or action specified by Government Code §§ 900 *et seq*.

10.12 Controlling Provisions. In the case of any conflict between the terms of this Agreement and the Exhibits hereto, a Purchase Order, or Consultant's Proposal (if any), the Agreement shall control. In the case of any conflict between the Exhibits hereto and a Purchase Order or the Consultant's Proposal, the Exhibits shall control. In the case of any conflict between the terms of a Purchase Order and the Consultant's Proposal, the Purchase Order shall control.

10.13 Counterparts. This Agreement may be executed in multiple counterparts, each of which shall be an original and all of which together shall constitute one agreement.

10.14 Construction of Agreement. Each party hereto has had an equivalent opportunity to participate in the drafting of the Agreement and/or to consult with legal counsel. Therefore, the usual construction of an agreement against the drafting party shall not apply hereto.

10.15 No Third Party Beneficiaries. This Agreement is made solely for the benefit of the parties hereto, with no intent to benefit any non-signator third parties. However, should Consultant provide Services to an Agency member, SCCPA and/or a SCPPA member (collectively for the purposes of this section only "Member") pursuant to section 1.4, the parties recognize that such Member may be a third party beneficiary solely as to the Purchase Order and Requested Services relating to such Member.

SIGNATURES ON NEXT PAGE

The Parties have executed this Agreement as of the date signed by the Agency.

NORTHERN CALIFORNIA POWER AGENCY	DEE'S DESIGN BOX
Date_____	Date_____
_____	_____
RANDY S. HOWARD, GENERAL MANAGER	**DEANE NORWOOD, CEO**

Attest:

_____
Assistant Secretary of the Commission

Approved as to Form:

_____
Jane E. Luckhardt, General Counsel

EXHIBIT A

SCOPE OF SERVICES

Dee's Design Box, LLC ("Consultant") shall provide graphic design services, as requested by the Northern California Power Agency ("Agency") on its behalf or on behalf of its Members, Southern California Public Power Authority ("SCPPA"), or SCPPA Members. Materials developed for NCPA under the scope of the agreement may be shared and used by NCPA Members for commercial purposes. In some cases, NCPA may request the creation of designs that can be rebranded by NCPA Members for their individual use.

The Consultant will provide the following general services, to be customized as needed by the requesting entity:

1. General Graphic Design Services
    - Design templates in InDesign, Photoshop, Adobe Illustrator, as required
    - Create custom brochures, conference agendas/programs, flow charts, models, illustrations, and other graphics
    - Create content for customer education and outreach campaigns
    - Import content into approved templates
    - Create unique marketing and communications collateral, as needed. Examples include: one-sheeters/fact sheets, brochures, posters, event designs (logos, signage, designs for promotional materials), evites/emails, banners, business cards, fliers, templates, reports, and social media graphics
    - Provide photography retouching and editing
    - Provide final compilation of documents in print and/or electronic formats (e.g. PDF, JPEG, GIF, PNG, PSD, EPS, or other design file formats) as needed and specified for each project

2. Presentation Graphics
    - Design presentation templates in deck slide software (e.g., PowerPoint)
    - Create custom flow charts, models, illustrations, and other graphics
    - Import content into approved template
    - Develop supplementary materials, such as handouts and creative leave-behinds
    - Provide final compilation of documents in print and/or electronic formats as needed

3. Special Projects
    - Website design
    - Support for the development of promotional videos
    - Complex visual representation of information and/or processes (including infographics)
    - Interface and coordinate with third party vendors, (e.g. printer companies, signage companies, translation services)
    - Instruction on printing and use of in-house copy machines for NCPA staff for those projects that can be finalized in-house at NCPA.

EXHIBIT B

COMPENSATION SCHEDULE AND HOURLY FEES

Compensation for all tasks, including hourly fees and expenses, shall not exceed $250,000.00. The hourly rates and or compensation break down and an estimated amount of expenses is as follows:

Hourly Rate
$75 per hour
Hourly rate to increase by 2% each year.

Estimates will be provided to requestors that will include an approximate total number of not-to-exceed hours to create design product(s) from start to finish.

Invoiced on the first of every month as a previous monthly total, broken out by job and within each job by time entries, from job requests completed.

Monthly Retainer
$6,000 per month for unlimited service hours
Monthly rate to increase by 2% each year.

Invoiced on the first of every month, or other agreed upon terms.

NOTE: As a public agency, NCPA shall not reimburse Consultant for travel, food and related costs in excess of those permitted by the Internal Revenue Service.

17

Commission Staff Report

COMMISSION MEETING DATE: August 26, 2021

SUBJECT: Background Stories Co – Five Year Multi-Task Consulting Services Agreement for Graphic Design Services; Applicable to the following: All Northern California Power Agency (NCPA), NCPA Members, Southern California Public Power Authority (SCPPA), and SCPPA Members

AGENDA CATEGORY: Consent

FROM:	Jane Cirrincione	**METHOD OF SELECTION:**
	Assistant General Manager	*Competitive Pricing Process*
Division:	Legislative & Regulatory Affairs	*If other, please describe:*
Department:	Legislative & Regulatory	

IMPACTED MEMBERS:

All Members	☒	**City of Lodi**	☐	**City of Shasta Lake**	☐
Alameda Municipal Power	☐	**City of Lompoc**	☐	**City of Ukiah**	☐
San Francisco Bay Area Rapid Transit	☐	**City of Palo Alto**	☐	**Plumas-Sierra REC**	☐
City of Biggs	☐	**City of Redding**	☐	**Port of Oakland**	☐
City of Gridley	☐	**City of Roseville**	☐	**Truckee Donner PUD**	☐
City of Healdsburg	☐	**City of Santa Clara**	☐	**Other**	☐
		If other, please specify			

RECOMMENDATION:

Approve Resolution 21-80 authorizing the General Manager or his designee to enter into a Multi-Task Consulting Services Agreement with Background Stories Co for graphic design services, with any non-substantial changes recommended and approved by the NCPA General Counsel, which shall not exceed $250,000 over five years, for use by NCPA, NCPA Members, by SCPPA, and SCPPA Members.

BACKGROUND:

Graphic design services are required from time to time by NCPA, NCPA Members, SCPPA, and SCPPA Members. Participants in NCPA's Customer Programs Working Groups requested assistance in contracting for graphic design services as part of the NCPA strategic planning process, and as a result this objective was incorporated into the agency-wide strategic plan approved by the NCPA Commission on April 29, 2021.

NCPA issued a Request for Proposal (RFP) LR 2102 on June 3, 2021, to solicit proposals from qualified consultants providing graphic design services. NCPA created a review group for the RFP consisting of NCPA staff and staff from NCPA Member entities, and this review group evaluated and scored timely proposals submitted to the RFP. Nine vendors responded to the RFP by the deadline of June 25, 2021. Based on the scoring review group's evaluation, three vendors were selected to provide graphic design services.

The review group selected Background Stories Co based on its experience and costs. NCPA is also entering into agreements with Dee's Design Box and Pat Davis Design Group, Inc. for similar services.

FISCAL IMPACT:

Upon execution, the total cost of the agreement is not to exceed $250,000 over five years. Purchase orders referencing the terms and conditions of the agreement will be issued following NCPA procurement policies and procedures.

SELECTION PROCESS:

Three vendors were selected as a result of an RFP process in accordance with NCPA's procurement policies and procedures. An RFP was posted on NCPA's website June 3, 2021, to June 25, 2021. A total of nine responses were received and evaluated based on: 1. Quality and completeness of proposal; 2. Knowledge, experience and skills to provide the requested services; 3. Experience of staff to be assigned to the project, based on prior engagements of similar scope and complexity; 4. Competitive rates for the requested services; 5. Demonstrated strong project management; and 6. Customer references. The selection process was completed by NCPA along with Alameda Municipal Power and the City of Lodi.

This enabling agreement does not commit NCPA to any expenditure of funds. NCPA will issue purchase orders based on cost and availability of the services needed at the time the service is required.

ENVIRONMENTAL ANALYSIS:

This activity would not result in a direct or reasonably foreseeable indirect change in the physical environment and is therefore not a "project" for purposes of Section 21065 of the California Environmental Quality Act. No environmental review is necessary.

COMMITTEE REVIEW:

Pending Legislative & Regulatory Affairs Committee review and approval during its regularly scheduled meeting on August 25, 2021.

Respectfully submitted,

RANDY S. HOWARD
General Manager

Attachments (2):

- Resolution 21-80
- Multi-Task Consulting Services Agreement with Background Stories Co

SR: 203:21

RESOLUTION 21-80

RESOLUTION OF THE NORTHERN CALIFORNIA POWER AGENCY APPROVING A MULTI-TASK CONSULTING SERVICES AGREEMENT WITH BACKGROUND STORIES CO

(reference Staff Report #203:21)

WHEREAS, graphic design services are required from time to time by the Northern California Power Agency (NCPA), NCPA Members, by the Southern California Public Power Authority (SCPPA), and SCPPA Members; and

WHEREAS, Background Stories Co is a provider of these services; and

WHEREAS, the NCPA Commission has reviewed the Multi-Task Consulting Services Agreement with Background Stories Co to provide such services as needed at any facilities owned and/or operated by NCPA, NCPA Members, by SCPPA, and SCPPA Members; and

WHEREAS, several vendors were selected as a result of a request for proposal process in accordance with NCPA's procurement policies and procedures; and

WHEREAS, this activity would not result in a direct or reasonably foreseeable indirect change in the physical environment and is therefore not a "project" for purposes of Section 21065 of the California Environmental Quality Act. No environmental review is necessary; and

NOW, THEREFORE BE IT RESOLVED, that the Commission of the Northern California Power Agency authorizes the General Manager or his designee to enter into a Multi-Task Consulting Services Agreement, with any non-substantial changes as approved by the NCPA General Counsel, which shall not exceed $250,000 over five years, for use by NCPA, NCPA Members, by SCPPA, and SCPPA Members.

PASSED, ADOPTED and APPROVED this ____ day of _____, 2021 by the following vote on roll call:

	Vote	Abstained	Absent
Alameda			
San Francisco BART			
Biggs			
Gridley			
Healdsburg			
Lodi			
Lompoc			
Palo Alto			
Port of Oakland			
Redding			
Roseville			
Santa Clara			
Shasta Lake			
Truckee Donner			
Ukiah			
Plumas-Sierra			

DAVID HAGELE
CHAIR

ATTEST: CARY A. PADGETT
ASSISTANT SECRETARY

MULTI-TASK CONSULTING SERVICES AGREEMENT BETWEEN THE NORTHERN CALIFORNIA POWER AGENCY AND BACKGROUND STORIES CO

This Consulting Services Agreement ("Agreement') is made by and between the Northern California Power Agency, a joint powers agency with its main office located at 651 Commerce Drive, Roseville, CA 95678-6420 ("Agency") and Background Stories Co, a corporation with its office located at 2821 Pleasant Ave, Minneapolis MN 55408 ("Consultant") (together sometimes referred to as the "Parties") as of _____, 2021 ("Effective Date") in Roseville, California.

Section 1. SERVICES. Subject to the terms and conditions set forth in this Agreement, Consultant shall provide to Agency the services described in the Scope of Services attached hereto as Exhibit A and incorporated herein ("Services"), at the time and place and in the manner specified therein.

1.1 **Term of Agreement.** The term of this Agreement shall begin on the Effective Date and shall end when Consultant completes the Services, or no later than five (5) years from the date this Agreement was signed by Agency, whichever is shorter.

1.2 **Standard of Performance.** Consultant shall perform the Services in the manner and according to the standards observed by a competent practitioner of the profession in which Consultant is engaged and for which Consultant is providing the Services. Consultant represents that it is licensed, qualified and experienced to provide the Services set forth herein.

1.3 **Assignment of Personnel.** Consultant shall assign only competent personnel to perform the Services. In the event that Agency, in its sole discretion, at any time during the term of this Agreement, requests the reassignment of any such personnel, Consultant shall, immediately upon receiving written notice from Agency of such request, reassign such personnel.

1.4 **Services Provided.** Services provided under this Agreement by Consultant may include Services directly to the Agency or, as requested by the Agency and consistent with the terms of this Agreement, to Agency members, Southern California Public Power Authority ("SCPPA") or SCPPA members.

1.5 **Request for Services.** At such time that Agency determines to use Consultant's Services under this Agreement, Agency shall issue a Purchase Order. The Purchase Order shall identify the specific services to be performed ("Requested Services"), may include a not-to-exceed monetary cap on Requested Services and expenditures authorized by that Purchase Order, and a time by which the Requested Services shall be completed. Consultant shall have seven calendar days from the date of the Agency's issuance of the Purchase Order in which to respond in writing that Consultant chooses not to perform the Requested Services. If Consultant agrees to perform the Requested Services, begins to perform the Requested Services, or does not respond within the seven day

period specified, then Consultant will have agreed to perform the Requested Services on the terms set forth in the Purchase Order, this Agreement and its Exhibits.

Section 2. COMPENSATION. Agency hereby agrees to pay Consultant an amount **NOT TO EXCEED** Two Hundred Fifty Thousand dollars ($250,000.00) for the Services, which shall include all fees, costs, expenses and other reimbursables, as set forth in Consultant's fee schedule, attached hereto and incorporated herein as Exhibit B. This dollar amount is not a guarantee that Agency will pay that full amount to the Consultant, but is merely a limit of potential Agency expenditures under this Agreement.

2.1 Invoices. Consultant shall submit invoices, not more often than once a month during the term of this Agreement, based on the cost for services performed and reimbursable costs incurred prior to the invoice date. Invoices shall contain the following information:

- The beginning and ending dates of the billing period;
- Services performed;
- The Purchase Order number authorizing the Services;
- At Agency's option, the total number of hours of work performed under the Agreement by Consultant and each employee, agent, and subcontractor of Consultant performing services hereunder; and
- At Agency's option, when the Consultant's Scope of Work identifies tasks, for each work item in each task, a copy of the applicable time entries showing the name of the person doing the work, the hours spent by each person, a brief description of the work, and each reimbursable expense, with supporting documentation, to Agency's reasonable satisfaction.

Invoices shall be sent to:

Northern California Power Agency
651 Commerce Drive
Roseville, California 95678
Attn: Accounts Payable
AcctsPayable@ncpa.com

2.2 Monthly Payment. Agency shall make monthly payments, based on invoices received, for services satisfactorily performed, and for authorized reimbursable costs incurred. Agency shall have thirty (30) days from the receipt of an invoice that complies with all of the requirements above to pay Consultant.

2.3 Payment of Taxes. Consultant is solely responsible for the payment of all federal, state and local taxes, including employment taxes, incurred under this Agreement.

2.4 **Authorization to Perform Services.** The Consultant is not authorized to perform any Services or incur any costs whatsoever under the terms of this Agreement until receipt of written authorization from the Contract Administrator.

2.5 **Timing for Submittal of Final Invoice.** Consultant shall have ninety (90) days after completion of its Services to submit its final invoice for the Requested Services. In the event Consultant fails to submit an invoice to Agency for any amounts due within the ninety (90) day period, Consultant is deemed to have waived its right to collect its final payment from Agency.

Section 3. FACILITIES AND EQUIPMENT. Except as set forth herein, Consultant shall, at its sole cost and expense, provide all facilities and equipment that may be necessary to perform the Services.

Section 4. INSURANCE REQUIREMENTS. Before beginning any work under this Agreement, Consultant, at its own cost and expense, shall procure the types and amounts of insurance listed below and shall maintain the types and amounts of insurance listed below for the period covered by this Agreement.

4.1 **Workers' Compensation.** If Consultant employs any person, Consultant shall maintain Statutory Workers' Compensation Insurance and Employer's Liability Insurance for any and all persons employed directly or indirectly by Consultant with limits of not less than one million dollars ($1,000,000.00) per accident.

4.2 **Commercial General and Automobile Liability Insurance.**

4.2.1 **Commercial General Insurance.** Consultant shall maintain commercial general liability insurance for the term of this Agreement, including products liability, covering any loss or liability, including the cost of defense of any action, for bodily injury, death, personal injury and broad form property damage which may arise out of the operations of Consultant. The policy shall provide a minimum limit of $2,000,000 per occurrence/$2,000,000 aggregate. Commercial general coverage shall be at least as broad as ISO Commercial General Liability form CG 0001 (current edition) on "an occurrence" basis covering comprehensive General Liability, with a self-insured retention or deductible of no more than $100,000. No endorsement shall be attached limiting the coverage.

4.2.2 **Automobile Liability.** Consultant shall maintain automobile liability insurance form CA 0001 (current edition) for the term of this Agreement covering any loss or liability, including the cost of defense of any action, arising from the operation, maintenance or use of any vehicle (symbol 1), whether or not owned by the Consultant, on or off Agency premises. The policy shall provide a minimum limit of $2,000,000 per each accident, with a self-insured retention or deductible of no more than $100,000. This insurance shall provide contractual liability covering all motor vehicles and

mobile equipment to the extent coverage may be excluded from general liability insurance.

4.2.3 General Liability/Umbrella Insurance. The coverage amounts set forth above may be met by a combination of underlying and umbrella policies as long as in combination the limits equal or exceed those stated.

4.3 Professional Liability Insurance. Not Applicable.

4.4 All Policies Requirements.

4.4.1 Verification of coverage. Prior to beginning any work under this Agreement, Consultant shall provide Agency with (1) a Certificate of Insurance that demonstrates compliance with all applicable insurance provisions contained herein and (2) policy endorsements to the policies referenced in Section 4.2, adding the Agency as an additional insured and declaring such insurance primary in regard to work performed pursuant to this Agreement.

4.4.2 Notice of Reduction in or Cancellation of Coverage. Consultant shall provide at least thirty (30) days prior written notice to Agency of any reduction in scope or amount, cancellation, or modification adverse to Agency of the policies referenced in Section 4.

4.4.3 Higher Limits. If Consultant maintains higher limits than the minimums specified herein, the Agency shall be entitled to coverage for the higher limits maintained by the Consultant.

4.4.4 Additional Certificates and Endorsements. If Consultant provides services to Agency members, SCPPA, and/or SCPPA members pursuant to this Agreement, Consultant shall provide certificates of insurance and policy endorsements, as referenced in Section 4.4.1, naming the specific Agency member, SCPPA or SCPPA member.

4.4.5 Waiver of Subrogation. Consultant agrees to waive subrogation which any insurer of Consultant may acquire from Consultant by virtue of the payment of any loss. Consultant agrees to obtain any endorsement that may be necessary to effect this waiver of subrogation. In addition, the Workers' Compensation policy shall be endorsed with a waiver of subrogation in favor of Agency for all work performed by Consultant, its employees, agents and subcontractors.

4.5 Consultant's Obligation. Consultant shall be solely responsible for ensuring that all equipment, vehicles and other items utilized in the performance of Services are operated, provided or otherwise utilized in a manner that ensues they are and remain covered by the policies referenced in Section 4 during this

Agreement. Consultant shall also ensure that all workers involved in the provision of Services are properly classified as employees, agents or independent contractors and are and remain covered by any and all workers' compensation insurance required by applicable law during this Agreement.

Section 5. INDEMNIFICATION AND CONSULTANT'S RESPONSIBILITIES.

5.1 Effect of Insurance. Agency's acceptance of insurance certificates and endorsements required under this Agreement does not relieve Consultant from liability under this indemnification and hold harmless clause. This indemnification and hold harmless clause shall apply to any damages or claims for damages whether or not such insurance policies shall have been determined to apply. By execution of this Agreement, Consultant acknowledges and agrees to the provisions of this Section and that it is a material element of consideration.

5.2 Scope. Consultant shall indemnify, defend with counsel reasonably acceptable to the Agency, and hold harmless the Agency, and its officials, commissioners, officers, employees, agents and volunteers from and against all losses, liabilities, claims, demands, suits, actions, damages, expenses, penalties, fines, costs (including without limitation costs and fees of litigation), judgments and causes of action of every nature arising out of or in connection with any acts or omissions by Consultant, its officers, officials, agents, and employees, except as caused by the sole or gross negligence of Agency. Notwithstanding, should this Agreement be construed as a construction agreement under Civil Code section 2783, then the exception referenced above shall also be for the active negligence of Agency.

Section 6. STATUS OF CONSULTANT.

6.1 Independent Contractor. Consultant is an independent contractor and not an employee of Agency. Agency shall have the right to control Consultant only insofar as the results of Consultant's Services and assignment of personnel pursuant to Section 1; otherwise, Agency shall not have the right to control the means by which Consultant accomplishes Services rendered pursuant to this Agreement. Notwithstanding any other Agency, state, or federal policy, rule, regulation, law, or ordinance to the contrary, Consultant and any of its employees, agents, and subcontractors providing services under this Agreement shall not qualify for or become entitled to, and hereby agree to waive any and all claims to, any compensation, benefit, or any incident of employment by Agency, including but not limited to eligibility to enroll in the California Public Employees Retirement System (PERS) as an employee of Agency and entitlement to any contribution to be paid by Agency for employer contributions and/or employee contributions for PERS benefits.

Consultant shall indemnify, defend, and hold harmless Agency for the payment of any employee and/or employer contributions for PERS benefits on behalf of Consultant or its employees, agents, or subcontractors, as well as for the

payment of any penalties and interest on such contributions, which would otherwise be the responsibility of Agency. Consultant and Agency acknowledge and agree that compensation paid by Agency to Consultant under this Agreement is based upon Consultant's estimated costs of providing the Services, including salaries and benefits of employees, agents and subcontractors of Consultant.

Consultant shall indemnify, defend, and hold harmless Agency from any lawsuit, administrative action, or other claim for penalties, losses, costs, damages, expense and liability of every kind, nature and description that arise out of, pertain to, or relate to such claims, whether directly or indirectly, due to Consultant's failure to secure workers' compensation insurance for its employees, agents, or subcontractors.

Consultant agrees that it is responsible for the provision of group healthcare benefits to its fulltime employees under 26 U.S.C. § 4980H of the Affordable Care Act. To the extent permitted by law, Consultant shall indemnify, defend and hold harmless Agency from any penalty issued to Agency under the Affordable Care Act resulting from the performance of the Services by any employee, agent, or subcontractor of Consultant.

6.2 **Consultant Not Agent.** Except as Agency may specify in writing, Consultant shall have no authority, express or implied, to act on behalf of Agency in any capacity whatsoever as an agent. Consultant shall have no authority, express or implied, pursuant to this Agreement to bind Agency to any obligation whatsoever.

6.3 **Assignment and Subcontracting.** This Agreement contemplates personal performance by Consultant and is based upon a determination of Consultant's unique professional competence, experience, and specialized professional knowledge. A substantial inducement to Agency for entering into this Agreement was and is the personal reputation and competence of Consultant. Consultant may not assign this Agreement or any interest therein without the prior written approval of the Agency. Consultant shall not subcontract any portion of the performance contemplated and provided for herein, other than to the subcontractors identified in Exhibit A, without prior written approval of the Agency. Where written approval is granted by the Agency, Consultant shall supervise all work subcontracted by Consultant in performing the services and shall be responsible for all work performed by a subcontractor as if Consultant itself had performed such work. The subcontracting of any work to subcontractors shall not relieve Consultant from any of its obligations under this Agreement with respect to the services and Consultant is obligated to ensure that any and all subcontractors performing any services shall be fully insured in all respects and to the same extent as set forth under Section 4, to Agency's satisfaction.

6.4 **Certification as to California Energy Commission.** If requested by the Agency, Consultant shall, at the same time it executes this Agreement, execute Exhibit C.

Section 7. LEGAL REQUIREMENTS.

7.1 **Governing Law.** The laws of the State of California shall govern this Agreement.

7.2 **Compliance with Applicable Laws.** Consultant and its subcontractors and agents, if any, shall comply with all laws applicable to the performance of the work hereunder.

7.3 **Licenses and Permits.** Consultant represents and warrants to Agency that Consultant and its employees, agents, and subcontractors (if any) have and will maintain at their sole expense during the term of this Agreement all licenses, permits, qualifications, and approvals of whatever nature that are legally required to practice their respective professions.

Section 8. TERMINATION AND MODIFICATION.

8.1 **Termination.** Agency may cancel this Agreement at any time and without cause upon ten (10) days prior written notice to Consultant.

In the event of termination, Consultant shall be entitled to compensation for Services satisfactorily completed as of the effective date of termination; Agency, however, may condition payment of such compensation upon Consultant delivering to Agency any or all records or documents, as referenced in Section 9.1 hereof.

8.2 **Amendments.** The Parties may amend this Agreement only by a writing signed by all the Parties.

8.3 **Survival.** All obligations arising prior to the termination of this Agreement and all provisions of this Agreement allocating liability between Agency and Consultant shall survive the termination of this Agreement.

8.4 **Options upon Breach by Consultant.** If Consultant materially breaches any of the terms of this Agreement, including but not limited to those set forth in Section 4, Agency's remedies shall include, but not be limited to, the following:

8.4.1 Immediately terminate the Agreement;

8.4.2 Retain the plans, specifications, drawings, reports, design documents, and any other work product prepared by Consultant pursuant to this Agreement;

8.4.3 Retain a different consultant to complete the Services not finished by Consultant; and/or

8.4.4 Charge Consultant the difference between the costs to complete the Services that is unfinished at the time of breach and the amount that Agency would have paid Consultant pursuant hereto if Consultant had completed the Services.

Section 9. KEEPING AND STATUS OF RECORDS.

9.1 **Records Created as Part of Consultant's Performance.** All reports, data, maps, models, charts, studies, surveys, photographs, memoranda, plans, studies, specifications, records, files, or any other documents or materials, in electronic or any other form, that Consultant prepares or obtains pursuant to this Agreement and that relate to the matters covered hereunder shall be the property of the Agency. Consultant hereby agrees to deliver those documents to the Agency upon termination of the Agreement. Agency and Consultant agree that, unless approved by Agency in writing, Consultant shall not release to any non-parties to this Agreement any data, plans, specifications, reports and other documents.

9.2 **Consultant's Books and Records.** Consultant shall maintain any and all records or other documents evidencing or relating to charges for Services or expenditures and disbursements charged to the Agency under this Agreement for a minimum of three (3) years, or for any longer period required by law, from the date of final payment to the Consultant to this Agreement.

9.3 **Inspection and Audit of Records.** Any records or documents that this Agreement requires Consultant to maintain shall be made available for inspection, audit, and/or copying at any time during regular business hours, upon oral or written request of the Agency. Under California Government Code Section 8546.7, if the amount of public funds expended under this Agreement exceeds ten thousand dollars ($10,000.00), the Agreement shall be subject to the examination and audit of the State Auditor, at the request of Agency or as part of any audit of the Agency, for a period of three (3) years after final payment under the Agreement.

9.4 **Confidential Information and Disclosure.**

9.4.1 **Confidential Information.** The term "Confidential Information", as used herein, shall mean any and all confidential, proprietary, or trade secret information, whether written, recorded, electronic, oral or otherwise, where the Confidential Information is made available in a tangible medium of expression and marked in a prominent location as confidential, proprietary and/or trade secret information. Confidential Information shall

not include information that: (a) was already known to the Receiving Party or is otherwise a matter of public knowledge, (b) was disclosed to Receiving Party by a third party without violating any confidentiality agreement, (c) was independently developed by Receiving Party without reverse engineering, as evidenced by written records thereof, or (d) was not marked as confidential Information in accordance with this section.

9.4.2 **Non-Disclosure of Confidential Information**. During the term of this Agreement, either party may disclose ("The Disclosing Party") confidential Information to the other party ("the Receiving Party"). The Receiving Party: (a) shall hold the Disclosing Party's Confidential Information in confident; and (b) shall take all reasonable steps to prevent any unauthorized possession, use, copying, transfer or disclosure of such Confidential Information.

9.4.3 **Permitted Disclosure.** Notwithstanding the foregoing, the following disclosures of Confidential Information are allowed. Receiving Party shall endeavor to provide prior written notice to Disclosing Party of any permitted disclosure made pursuant to Section 9.4.3.2 or 9.4.3.3. Disclosing Party may seek a protective order, including without limitation, a temporary restraining order to prevent or contest such permitted disclosure; provided, however, that Disclosing Party shall seek such remedies at its sole expense. Neither party shall have any liability for such permitted disclosures:

9.4.3.1 Disclosure to employees, agents, consultants, contractors, subcontractors or other representatives of Receiving Party that have a need to know in connection with this Agreement.

9.4.3.2 Disclosure in response to a valid order of a court, government or regulatory agency or as may otherwise be required by law; and

9.4.3.3 Disclosure by Agency in response to a request pursuant to the California Public Records Act.

9.4.4 **Handling of Confidential Information**. Upon conclusion or termination of the Agreement, Receiving Party shall return to Disclosing Party or destroy Confidential Information (including all copies thereof), if requested by Disclosing Party in writing. Notwithstanding the foregoing, the Receiving Party may retain copies of such Confidential Information, subject to the confidentiality provisions of this Agreement: (a) for archival purposes in its computer system; (b) in its legal department files; and (c) in files of Receiving Party's representatives where such copies are necessary to comply with applicable law. Party shall not disclose the Disclosing Party's Information to any person other than those of the Receiving Party's employees, agents, consultants, contractors and

subcontractors who have a need to know in connection with this Agreement.

Section 10. MISCELLANEOUS PROVISIONS.

10.1 Attorneys' Fees. If a party to this Agreement brings any action, including an action for declaratory relief, to enforce or interpret the provision of this Agreement, the prevailing party shall be entitled to reasonable attorneys' fees in addition to any other relief to which that party may be entitled. The court may set such fees in the same action or in a separate action brought for that purpose.

10.2 Venue. In the event that either party brings any action against the other under this Agreement, the Parties agree that trial of such action shall be vested exclusively in the state courts of California in the County of Placer or in the United States District Court for the Eastern District of California.

10.3 Severability. If a court of competent jurisdiction finds or rules that any provision of this Agreement is invalid, void, or unenforceable, the provisions of this Agreement not so adjudged shall remain in full force and effect. The invalidity in whole or in part of any provision of this Agreement shall not void or affect the validity of any other provision of this Agreement.

10.4 No Implied Waiver of Breach. The waiver of any breach of a specific provision of this Agreement does not constitute a waiver of any other breach of that term or any other term of this Agreement.

10.5 Successors and Assigns. The provisions of this Agreement shall inure to the benefit of and shall apply to and bind the successors and assigns of the Parties.

10.6 Conflict of Interest. Consultant may serve other clients, but none whose activities within the corporate limits of Agency or whose business, regardless of location, would place Consultant in a "conflict of interest," as that term is defined in the Political Reform Act, codified at California Government Code Section 81000 *et seq.*

Consultant shall not employ any Agency official in the work performed pursuant to this Agreement. No officer or employee of Agency shall have any financial interest in this Agreement that would violate California Government Code Sections 1090 *et seq.*

10.7 Contract Administrator. This Agreement shall be administered by Jane Cirrincione, Assistant General Manager, or his/her designee, who shall act as the Agency's representative. All correspondence shall be directed to or through the representative.

10.8 Notices. Any written notice to Consultant shall be sent to:

Arlene Birt
Founder & Creative Director
2821 Pleasant Ave
Minneapolis MN, 55408

Any written notice to Agency shall be sent to:

Randy S. Howard
General Manager
Northern California Power Agency
651 Commerce Drive
Roseville, CA 95678

With a copy to:

Jane E. Luckhardt
General Counsel
Northern California Power Agency
651 Commerce Drive
Roseville, CA 95678

10.9 **Professional Seal.** Where applicable in the determination of the Agency, the first page of a technical report, first page of design specifications, and each page of construction drawings shall be stamped/sealed and signed by the licensed professional responsible for the report/design preparation.

10.10 **Integration; Incorporation.** This Agreement, including all the exhibits attached hereto, represents the entire and integrated agreement between Agency and Consultant and supersedes all prior negotiations, representations, or agreements, either written or oral. All exhibits attached hereto are incorporated by reference herein.

10.11 **Alternative Dispute Resolution**. If any dispute arises between the Parties that cannot be settled after engaging in good faith negotiations, Agency and Consultant agree to resolve the dispute in accordance with the following:

10.11.1 Each party shall designate a senior management or executive level representative to negotiate any dispute;

10.11.2 The representatives shall attempt, through good faith negotiations, to resolve the dispute by any means within their authority.

10.11.3 If the issue remains unresolved after fifteen (15) days of good faith negotiations, the Parties shall attempt to resolve the disagreement by negotiation between legal counsel. If the above process fails,

the Parties shall resolve any remaining disputes through mediation to expedite the resolution of the dispute.

10.11.4 The mediation process shall provide for the selection within fifteen (15) days by both Parties of a disinterested third person as mediator, shall be commenced within thirty (30) days and shall be concluded within fifteen (15) days from the commencement of the mediation.

10.11.5 The Parties shall equally bear the costs of any third party in any alternative dispute resolution process.

10.11.6 The alternative dispute resolution process is a material condition to this Agreement and must be exhausted as an administrative prior to either Party initiating legal action. This alternative dispute resolution process is not intended to nor shall be construed to change the time periods for filing a claim or action specified by Government Code §§ 900 *et seq*.

10.12 Controlling Provisions. In the case of any conflict between the terms of this Agreement and the Exhibits hereto, a Purchase Order, or Consultant's Proposal (if any), the Agreement shall control. In the case of any conflict between the Exhibits hereto and a Purchase Order or the Consultant's Proposal, the Exhibits shall control. In the case of any conflict between the terms of a Purchase Order and the Consultant's Proposal, the Purchase Order shall control.

10.13 Counterparts. This Agreement may be executed in multiple counterparts, each of which shall be an original and all of which together shall constitute one agreement.

10.14 Construction of Agreement. Each party hereto has had an equivalent opportunity to participate in the drafting of the Agreement and/or to consult with legal counsel. Therefore, the usual construction of an agreement against the drafting party shall not apply hereto.

10.15 No Third Party Beneficiaries. This Agreement is made solely for the benefit of the parties hereto, with no intent to benefit any non-signator third parties. However, should Consultant provide Services to an Agency member, SCCPA and/or a SCPPA member (collectively for the purposes of this section only "Member") pursuant to section 1.4, the parties recognize that such Member may be a third party beneficiary solely as to the Purchase Order and Requested Services relating to such Member.

The Parties have executed this Agreement as of the date signed by the Agency.

NORTHERN CALIFORNIA POWER AGENCY	BACKGROUND STORIES CO
Date_____	Date_____
_____	_____
RANDY S. HOWARD, GENERAL MANAGER	**ARLENE BIRT, FOUNDER & CREATIVE DIRECTOR**

Attest:

_____
Assistant Secretary of the Commission

Approved as to Form:

_____
Jane E. Luckhardt, General Counsel

EXHIBIT A

SCOPE OF SERVICES

Background Stories Co ("Consultant") shall provide graphic design services, as requested by the Northern California Power Agency ("Agency"), on its behalf or on behalf of its Members, Southern California Public Power Authority ("SCPPA"), or SCPPA Members. Materials developed for NCPA under the scope of the agreement may be shared and used by NCPA Members for commercial purposes. In some cases, NCPA may request the creation of designs that can be rebranded by NCPA Members for their individual use.

The Consultant will provide the following general services, to be customized as needed by the requesting entity:

1. General Graphic Design Services
    - Design templates in InDesign, Photoshop, Adobe Illustrator, as required
    - Create custom brochures, conference agendas/programs, flow charts, models, illustrations, and other graphics
    - Create content for customer education and outreach campaigns
    - Import content into approved templates
    - Create unique marketing and communications collateral, as needed. Examples include: one-sheeters/fact sheets, brochures, posters, event designs (logos, signage, designs for promotional materials), evites/emails, banners, business cards, fliers, templates, reports, and social media graphics
    - Provide photography retouching and editing
    - Provide final compilation of documents in print and/or electronic formats (e.g. PDF, JPEG, GIF, PNG, PSD, EPS, or other design file formats) as needed and specified for each project

2. Presentation Graphics
    - Design presentation templates in deck slide software (e.g., PowerPoint)
    - Create custom flow charts, models, illustrations, and other graphics
    - Import content into approved template
    - Develop supplementary materials, such as handouts and creative leave-behinds
    - Provide final compilation of documents in print and/or electronic formats as needed

3. Special Projects
    - Website design
    - Support for the development of promotional videos

- Complex visual representation of information and/or processes (including infographics)
- Interface and coordinate with third party vendors, (e.g. printer companies, signage companies, translation services)
- Instruction on printing and use of in-house copy machines for NCPA staff for those projects that can be finalized in-house at NCPA.

Subcontractors

Scott Anderson, Room34 Creative Services – Web Development Services

EXHIBIT B

COMPENSATION SCHEDULE AND HOURLY FEES

Compensation for all tasks, including hourly fees and expenses, shall not exceed $250,000.00. The hourly rates and or compensation break down and an estimated amount of expenses is as follows:

Hourly Project Fees
Creative direction, data visualization, and complex infographics: $175/hr
Design: $125-$150/hr (junior and senior rates)
Publication layout: $90/hr
Blended rate: $125-$150/hr (depends on type of work)

Design Services Project Pricing
The budget range for projects depends on the complexity of graphics and content, the scope of story development and project management, and any other needs such as stock photography. Pricing for specific projects will be quoted when requested.

Below are sample pricing ranges; actual projects may differ from the prices below based on scope and complexity:

- Infographics: $300-800 (spot: within a report) $2000-3250 (full page) $3500-4750 (full page w/story development)
- Data Visualization $500-2000+ (range reflects basic data to complex, multivariate data)
- Brochures and Reports $1000-5000+ (range dependent upon format, complexity, and number of pages)
- Icons and illustrations $500-2500+ (range dependent upon complexity)
- Animation $5000-9500 (range dependent upon length and complexity)
- Social Media Assets $250-500 (range dependent upon complexity)

Estimates do not include expenses such as printing, photography, and related purchases. Any expense over $50 USD will be approved by NCPA prior to purchase.

NCPA Retainer Option
For ongoing work, projects may be structured as a retainer to provide consistent yet flexible assistance. Within retainers, individual projects are approached with a focus on continuity, addressing how several components can support your overarching communication plan. The retainer option provides a lower hourly rate and can be initiated at any time. Monthly reports will be generated upon request. Retainers start at $3k/month.

NOTE: As a public agency, NCPA shall not reimburse Consultant for travel, food and related costs in excess of those permitted by the Internal Revenue Service.

18

Commission Staff Report

COMMISSION MEETING DATE: August 26, 2021

SUBJECT: Pat Davis Design Group, Inc. – Five Year Multi-Task Consulting Services Agreement for Graphic Design Services; Applicable to the following: All Northern California Power Agency (NCPA), NCPA Members, Southern California Public Power Authority (SCPPA), and SCPPA Members

AGENDA CATEGORY: Consent

FROM:	Jane Cirrincione JC	**METHOD OF SELECTION:**
	Assistant General Manager	*Competitive Pricing Process*
Division:	Legislative & Regulatory Affairs	*If other, please describe:*
Department:	Legislative & Regulatory	

IMPACTED MEMBERS:

All Members	☒	**City of Lodi**	☐	**City of Shasta Lake**	☐
Alameda Municipal Power	☐	**City of Lompoc**	☐	**City of Ukiah**	☐
San Francisco Bay Area Rapid Transit	☐	**City of Palo Alto**	☐	**Plumas-Sierra REC**	☐
City of Biggs	☐	**City of Redding**	☐	**Port of Oakland**	☐
City of Gridley	☐	**City of Roseville**	☐	**Truckee Donner PUD**	☐
City of Healdsburg	☐	**City of Santa Clara**	☐	**Other**	☐
		If other, please specify		_____	
				_____	

RECOMMENDATION:

Approve Resolution 21-81 authorizing the General Manager or his designee to enter into a Multi-Task Consulting Services Agreement with Pat Davis Design Group, Inc. for graphic design services, with any non-substantial changes recommended and approved by the NCPA General Counsel, which shall not exceed $250,000 over five years, for use by NCPA, NCPA Members, by SCPPA, and SCPPA Members.

BACKGROUND:

Graphic design services are required from time to time by NCPA, NCPA Members, SCPPA, and SCPPA Members. Participants in NCPA's Customer Programs Working Groups requested assistance in contracting for graphic design services as part of the NCPA strategic planning process, and as a result this objective was incorporated into the agency-wide strategic plan approved by the NCPA Commission on April 29, 2021.

NCPA issued a Request for Proposal (RFP) LR 2102 on June 3, 2021, to solicit proposals from qualified consultants providing graphic design services. NCPA created a review group for the RFP consisting of NCPA staff and staff from NCPA Member entities, and this review group evaluated and scored timely proposals submitted to the RFP. Nine vendors responded to the RFP by the deadline of June 25, 2021. Based on the scoring review group's evaluation, three vendors were selected to provide graphic design services.

The review group selected Pat Davis Design Group, Inc. based on its experience and costs. NCPA is also entering into agreements with Dee's Design Box and Background Stories Co for similar services.

FISCAL IMPACT:

Upon execution, the total cost of the agreement is not to exceed $250,000 over five years. Purchase orders referencing the terms and conditions of the agreement will be issued following NCPA procurement policies and procedures.

SELECTION PROCESS:

Three vendors were selected as a result of an RFP process in accordance with NCPA's procurement policies and procedures. An RFP was posted on NCPA's website June 3, 2021, to June 25, 2021. A total of nine responses were received and evaluated based on: 1. Quality and completeness of proposal; 2. Knowledge, experience and skills to provide the requested services; 3. Experience of staff to be assigned to the project, based on prior engagements of similar scope and complexity; 4. Competitive rates for the requested services; 5. Demonstrated strong project management; and 6. Customer references. The selection process was completed by NCPA along with Alameda Municipal Power and the City of Lodi.

This enabling agreement does not commit NCPA to any expenditure of funds. NCPA will issue purchase orders based on cost and availability of the services needed at the time the service is required.

ENVIRONMENTAL ANALYSIS:

This activity would not result in a direct or reasonably foreseeable indirect change in the physical environment and is therefore not a "project" for purposes of Section 21065 of the California Environmental Quality Act. No environmental review is necessary.

COMMITTEE REVIEW:

Pending Legislative & Regulatory Affairs Committee review and approval during its regularly scheduled meeting on August 25, 2021.

Respectfully submitted,

RANDY S. HOWARD
General Manager

Attachments (2):

- Resolution 21-81
- Multi-Task Consulting Services Agreement with Pat Davis Design Group, Inc.

SR: 204:21

RESOLUTION 21-81

RESOLUTION OF THE NORTHERN CALIFORNIA POWER AGENCY APPROVING A MULTI-TASK CONSULTING SERVICES AGREEMENT WITH PAT DAVIS DESIGN GROUP, INC.

(reference Staff Report #204:21)

WHEREAS, graphic design services are required from time to time by the Northern California Power Agency (NCPA), NCPA Members, by the Southern California Public Power Authority (SCPPA), and SCPPA Members; and

WHEREAS, Pat Davis Design Group, Inc. is a provider of these services; and

WHEREAS, the NCPA Commission has reviewed the Multi-Task Consulting Services Agreement with Pat Davis Design Group, Inc. to provide such services as needed at any facilities owned and/or operated by NCPA, NCPA Members, by SCPPA, and SCPPA Members; and

WHEREAS, several vendors were selected as a result of a request for proposal process in accordance with NCPA's procurement policies and procedures; and

WHEREAS, this activity would not result in a direct or reasonably foreseeable indirect change in the physical environment and is therefore not a "project" for purposes of Section 21065 of the California Environmental Quality Act. No environmental review is necessary; and

NOW, THEREFORE BE IT RESOLVED, that the Commission of the Northern California Power Agency authorizes the General Manager or his designee to enter into a Multi-Task Consulting Services Agreement, with any non-substantial changes as approved by the NCPA General Counsel, which shall not exceed $250,000 over five years, for use by NCPA, NCPA Members, by SCPPA, and SCPPA Members.

PASSED, ADOPTED and APPROVED this ____ day of _____, 2021 by the following vote on roll call:

	Vote	Abstained	Absent
Alameda			
San Francisco BART			
Biggs			
Gridley			
Healdsburg			
Lodi			
Lompoc			
Palo Alto			
Port of Oakland			
Redding			
Roseville			
Santa Clara			
Shasta Lake			
Truckee Donner			
Ukiah			
Plumas-Sierra			

_____
DAVID HAGELE
CHAIR

ATTEST:

_____
CARY A. PADGETT
ASSISTANT SECRETARY

MULTI-TASK CONSULTING SERVICES AGREEMENT BETWEEN THE NORTHERN CALIFORNIA POWER AGENCY AND PAT DAVIS DESIGN GROUP, INC.

This Consulting Services Agreement ("Agreement') is made by and between the Northern California Power Agency, a joint powers agency with its main office located at 651 Commerce Drive, Roseville, CA 95678-6420 ("Agency") and Pat Davis Design Group, Inc., a corporation with its office located at 333 University Ave, Suite 200, Sacramento, CA 95825 ("Consultant") (together sometimes referred to as the "Parties") as of _____, 2021 ("Effective Date") in Roseville, California.

Section 1. SERVICES. Subject to the terms and conditions set forth in this Agreement, Consultant shall provide to Agency the services described in the Scope of Services attached hereto as Exhibit A and incorporated herein ("Services"), at the time and place and in the manner specified therein.

1.1 **Term of Agreement.** The term of this Agreement shall begin on the Effective Date and shall end when Consultant completes the Services, or no later than five (5) years from the date this Agreement was signed by Agency, whichever is shorter.

1.2 **Standard of Performance.** Consultant shall perform the Services in the manner and according to the standards observed by a competent practitioner of the profession in which Consultant is engaged and for which Consultant is providing the Services. Consultant represents that it is licensed, qualified and experienced to provide the Services set forth herein.

1.3 **Assignment of Personnel.** Consultant shall assign only competent personnel to perform the Services. In the event that Agency, in its sole discretion, at any time during the term of this Agreement, requests the reassignment of any such personnel, Consultant shall, immediately upon receiving written notice from Agency of such request, reassign such personnel.

1.4 **Services Provided.** Services provided under this Agreement by Consultant may include Services directly to the Agency or, as requested by the Agency and consistent with the terms of this Agreement, to Agency members, Southern California Public Power Authority ("SCPPA") or SCPPA members.

1.5 **Request for Services.** At such time that Agency determines to use Consultant's Services under this Agreement, Agency shall issue a Purchase Order. The Purchase Order shall identify the specific services to be performed ("Requested Services"), may include a not-to-exceed monetary cap on Requested Services and expenditures authorized by that Purchase Order, and a time by which the Requested Services shall be completed. Consultant shall have seven calendar days from the date of the Agency's issuance of the Purchase Order in which to respond in writing that Consultant chooses not to perform the Requested Services. If Consultant agrees to perform the Requested Services, begins to perform the Requested Services, or does not respond within the seven day

period specified, then Consultant will have agreed to perform the Requested Services on the terms set forth in the Purchase Order, this Agreement and its Exhibits.

Section 2. COMPENSATION. Agency hereby agrees to pay Consultant an amount **NOT TO EXCEED** Two Hundred Fifty Thousand dollars ($250,000) for the Services, which shall include all fees, costs, expenses and other reimbursables, as set forth in Consultant's fee schedule, attached hereto and incorporated herein as Exhibit B. This dollar amount is not a guarantee that Agency will pay that full amount to the Consultant, but is merely a limit of potential Agency expenditures under this Agreement.

2.1 Invoices. Consultant shall submit invoices, not more often than once a month during the term of this Agreement, based on the cost for services performed and reimbursable costs incurred prior to the invoice date. Invoices shall contain the following information:

- The beginning and ending dates of the billing period;
- Services performed;
- The Purchase Order number authorizing the Services;
- At Agency's option, the total number of hours of work performed under the Agreement by Consultant and each employee, agent, and subcontractor of Consultant performing services hereunder; and
- At Agency's option, when the Consultant's Scope of Work identifies tasks, for each work item in each task, a copy of the applicable time entries showing the name of the person doing the work, the hours spent by each person, a brief description of the work, and each reimbursable expense, with supporting documentation, to Agency's reasonable satisfaction.

Invoices shall be sent to:

Northern California Power Agency
651 Commerce Drive
Roseville, California 95678
Attn: Accounts Payable
AcctsPayable@ncpa.com

2.2 Monthly Payment. Agency shall make monthly payments, based on invoices received, for services satisfactorily performed, and for authorized reimbursable costs incurred. Agency shall have thirty (30) days from the receipt of an invoice that complies with all of the requirements above to pay Consultant.

2.3 Payment of Taxes. Consultant is solely responsible for the payment of all federal, state and local taxes, including employment taxes, incurred under this Agreement.

2.4 **Authorization to Perform Services.** The Consultant is not authorized to perform any Services or incur any costs whatsoever under the terms of this Agreement until receipt of written authorization from the Contract Administrator.

2.5 **Timing for Submittal of Final Invoice.** Consultant shall have ninety (90) days after completion of its Services to submit its final invoice for the Requested Services. In the event Consultant fails to submit an invoice to Agency for any amounts due within the ninety (90) day period, Consultant is deemed to have waived its right to collect its final payment from Agency.

Section 3. FACILITIES AND EQUIPMENT. Except as set forth herein, Consultant shall, at its sole cost and expense, provide all facilities and equipment that may be necessary to perform the Services.

Section 4. INSURANCE REQUIREMENTS. Before beginning any work under this Agreement, Consultant, at its own cost and expense, shall procure the types and amounts of insurance listed below and shall maintain the types and amounts of insurance listed below for the period covered by this Agreement.

4.1 **Workers' Compensation.** If Consultant employs any person, Consultant shall maintain Statutory Workers' Compensation Insurance and Employer's Liability Insurance for any and all persons employed directly or indirectly by Consultant with limits of not less than one million dollars ($1,000,000.00) per accident.

4.2 **Commercial General and Automobile Liability Insurance.**

4.2.1 **Commercial General Insurance.** Consultant shall maintain commercial general liability insurance for the term of this Agreement, including products liability, covering any loss or liability, including the cost of defense of any action, for bodily injury, death, personal injury and broad form property damage which may arise out of the operations of Consultant. The policy shall provide a minimum limit of $2,000,000 per occurrence/$2,000,000 aggregate. Commercial general coverage shall be at least as broad as ISO Commercial General Liability form CG 0001 (current edition) on "an occurrence" basis covering comprehensive General Liability, with a self-insured retention or deductible of no more than $100,000. No endorsement shall be attached limiting the coverage.

4.2.2 **Automobile Liability.** Consultant shall maintain automobile liability insurance form CA 0001 (current edition) for the term of this Agreement covering any loss or liability, including the cost of defense of any action, arising from the operation, maintenance or use of any vehicle (symbol 1), whether or not owned by the Consultant, on or off Agency premises. The policy shall provide a minimum limit of $2,000,000 per each accident, with a self-insured retention or deductible of no more than $100,000. This insurance shall provide contractual liability covering all motor vehicles and

mobile equipment to the extent coverage may be excluded from general liability insurance.

4.2.3 **General Liability/Umbrella Insurance.** The coverage amounts set forth above may be met by a combination of underlying and umbrella policies as long as in combination the limits equal or exceed those stated.

4.3 **Professional Liability Insurance.** Not Applicable.

4.4 **All Policies Requirements.**

4.4.1 **Verification of coverage.** Prior to beginning any work under this Agreement, Consultant shall provide Agency with (1) a Certificate of Insurance that demonstrates compliance with all applicable insurance provisions contained herein and (2) policy endorsements to the policies referenced in Section 4.2, adding the Agency as an additional insured and declaring such insurance primary in regard to work performed pursuant to this Agreement.

4.4.2 **Notice of Reduction in or Cancellation of Coverage.** Consultant shall provide at least thirty (30) days prior written notice to Agency of any reduction in scope or amount, cancellation, or modification adverse to Agency of the policies referenced in Section 4.

4.4.3 **Higher Limits.** If Consultant maintains higher limits than the minimums specified herein, the Agency shall be entitled to coverage for the higher limits maintained by the Consultant.

4.4.4 **Additional Certificates and Endorsements.** If Consultant provides services to Agency members, SCPPA, and/or SCPPA members pursuant to this Agreement, Consultant shall provide certificates of insurance and policy endorsements, as referenced in Section 4.4.1, naming the specific Agency member, SCPPA or SCPPA member.

4.4.5 **Waiver of Subrogation.** Consultant agrees to waive subrogation which any insurer of Consultant may acquire from Consultant by virtue of the payment of any loss. Consultant agrees to obtain any endorsement that may be necessary to effect this waiver of subrogation. In addition, the Workers' Compensation policy shall be endorsed with a waiver of subrogation in favor of Agency for all work performed by Consultant, its employees, agents and subcontractors.

4.5 **Consultant's Obligation.** Consultant shall be solely responsible for ensuring that all equipment, vehicles and other items utilized in the performance of Services are operated, provided or otherwise utilized in a manner that ensues they are and remain covered by the policies referenced in Section 4 during this

Agreement. Consultant shall also ensure that all workers involved in the provision of Services are properly classified as employees, agents or independent contractors and are and remain covered by any and all workers' compensation insurance required by applicable law during this Agreement.

Section 5. INDEMNIFICATION AND CONSULTANT'S RESPONSIBILITIES.

5.1 Effect of Insurance. Agency's acceptance of insurance certificates and endorsements required under this Agreement does not relieve Consultant from liability under this indemnification and hold harmless clause. This indemnification and hold harmless clause shall apply to any damages or claims for damages whether or not such insurance policies shall have been determined to apply. By execution of this Agreement, Consultant acknowledges and agrees to the provisions of this Section and that it is a material element of consideration.

5.2 Scope. Consultant shall indemnify, defend with counsel reasonably acceptable to the Agency, and hold harmless the Agency, and its officials, commissioners, officers, employees, agents and volunteers from and against all losses, liabilities, claims, demands, suits, actions, damages, expenses, penalties, fines, costs (including without limitation costs and fees of litigation), judgments and causes of action of every nature arising out of or in connection with any acts or omissions by Consultant, its officers, officials, agents, and employees, except as caused by the sole or gross negligence of Agency. Notwithstanding, should this Agreement be construed as a construction agreement under Civil Code section 2783, then the exception referenced above shall also be for the active negligence of Agency.

Section 6. STATUS OF CONSULTANT.

6.1 Independent Contractor. Consultant is an independent contractor and not an employee of Agency. Agency shall have the right to control Consultant only insofar as the results of Consultant's Services and assignment of personnel pursuant to Section 1; otherwise, Agency shall not have the right to control the means by which Consultant accomplishes Services rendered pursuant to this Agreement. Notwithstanding any other Agency, state, or federal policy, rule, regulation, law, or ordinance to the contrary, Consultant and any of its employees, agents, and subcontractors providing services under this Agreement shall not qualify for or become entitled to, and hereby agree to waive any and all claims to, any compensation, benefit, or any incident of employment by Agency, including but not limited to eligibility to enroll in the California Public Employees Retirement System (PERS) as an employee of Agency and entitlement to any contribution to be paid by Agency for employer contributions and/or employee contributions for PERS benefits.

Consultant shall indemnify, defend, and hold harmless Agency for the payment of any employee and/or employer contributions for PERS benefits on behalf of Consultant or its employees, agents, or subcontractors, as well as for the

payment of any penalties and interest on such contributions, which would otherwise be the responsibility of Agency. Consultant and Agency acknowledge and agree that compensation paid by Agency to Consultant under this Agreement is based upon Consultant's estimated costs of providing the Services, including salaries and benefits of employees, agents and subcontractors of Consultant.

Consultant shall indemnify, defend, and hold harmless Agency from any lawsuit, administrative action, or other claim for penalties, losses, costs, damages, expense and liability of every kind, nature and description that arise out of, pertain to, or relate to such claims, whether directly or indirectly, due to Consultant's failure to secure workers' compensation insurance for its employees, agents, or subcontractors.

Consultant agrees that it is responsible for the provision of group healthcare benefits to its fulltime employees under 26 U.S.C. § 4980H of the Affordable Care Act. To the extent permitted by law, Consultant shall indemnify, defend and hold harmless Agency from any penalty issued to Agency under the Affordable Care Act resulting from the performance of the Services by any employee, agent, or subcontractor of Consultant.

6.2 **Consultant Not Agent.** Except as Agency may specify in writing, Consultant shall have no authority, express or implied, to act on behalf of Agency in any capacity whatsoever as an agent. Consultant shall have no authority, express or implied, pursuant to this Agreement to bind Agency to any obligation whatsoever.

6.3 **Assignment and Subcontracting.** This Agreement contemplates personal performance by Consultant and is based upon a determination of Consultant's unique professional competence, experience, and specialized professional knowledge. A substantial inducement to Agency for entering into this Agreement was and is the personal reputation and competence of Consultant. Consultant may not assign this Agreement or any interest therein without the prior written approval of the Agency. Consultant shall not subcontract any portion of the performance contemplated and provided for herein, other than to the subcontractors identified in Exhibit A, without prior written approval of the Agency. Where written approval is granted by the Agency, Consultant shall supervise all work subcontracted by Consultant in performing the services and shall be responsible for all work performed by a subcontractor as if Consultant itself had performed such work. The subcontracting of any work to subcontractors shall not relieve Consultant from any of its obligations under this Agreement with respect to the services and Consultant is obligated to ensure that any and all subcontractors performing any services shall be fully insured in all respects and to the same extent as set forth under Section 4, to Agency's satisfaction.

6.4 **Certification as to California Energy Commission.** If requested by the Agency, Consultant shall, at the same time it executes this Agreement, execute Exhibit C.

Section 7. LEGAL REQUIREMENTS.

7.1 **Governing Law.** The laws of the State of California shall govern this Agreement.

7.2 **Compliance with Applicable Laws.** Consultant and its subcontractors and agents, if any, shall comply with all laws applicable to the performance of the work hereunder.

7.3 **Licenses and Permits.** Consultant represents and warrants to Agency that Consultant and its employees, agents, and subcontractors (if any) have and will maintain at their sole expense during the term of this Agreement all licenses, permits, qualifications, and approvals of whatever nature that are legally required to practice their respective professions.

Section 8. TERMINATION AND MODIFICATION.

8.1 **Termination.** Agency may cancel this Agreement at any time and without cause upon ten (10) days prior written notice to Consultant.

In the event of termination, Consultant shall be entitled to compensation for Services satisfactorily completed as of the effective date of termination; Agency, however, may condition payment of such compensation upon Consultant delivering to Agency any or all records or documents, as referenced in Section 9.1 hereof.

8.2 **Amendments.** The Parties may amend this Agreement only by a writing signed by all the Parties.

8.3 **Survival.** All obligations arising prior to the termination of this Agreement and all provisions of this Agreement allocating liability between Agency and Consultant shall survive the termination of this Agreement.

8.4 **Options upon Breach by Consultant.** If Consultant materially breaches any of the terms of this Agreement, including but not limited to those set forth in Section 4, Agency's remedies shall include, but not be limited to, the following:

8.4.1 Immediately terminate the Agreement;

8.4.2 Retain the plans, specifications, drawings, reports, design documents, and any other work product prepared by Consultant pursuant to this Agreement;

8.4.3 Retain a different consultant to complete the Services not finished by Consultant; and/or

8.4.4 Charge Consultant the difference between the costs to complete the Services that is unfinished at the time of breach and the amount that Agency would have paid Consultant pursuant hereto if Consultant had completed the Services.

Section 9. KEEPING AND STATUS OF RECORDS.

9.1 **Records Created as Part of Consultant's Performance.** All reports, data, maps, models, charts, studies, surveys, photographs, memoranda, plans, studies, specifications, records, files, or any other documents or materials, in electronic or any other form, that Consultant prepares or obtains pursuant to this Agreement and that relate to the matters covered hereunder shall be the property of the Agency. Consultant hereby agrees to deliver those documents to the Agency upon termination of the Agreement. Agency and Consultant agree that, unless approved by Agency in writing, Consultant shall not release to any non-parties to this Agreement any data, plans, specifications, reports and other documents.

9.2 **Consultant's Books and Records.** Consultant shall maintain any and all records or other documents evidencing or relating to charges for Services or expenditures and disbursements charged to the Agency under this Agreement for a minimum of three (3) years, or for any longer period required by law, from the date of final payment to the Consultant to this Agreement.

9.3 **Inspection and Audit of Records.** Any records or documents that this Agreement requires Consultant to maintain shall be made available for inspection, audit, and/or copying at any time during regular business hours, upon oral or written request of the Agency. Under California Government Code Section 8546.7, if the amount of public funds expended under this Agreement exceeds ten thousand dollars ($10,000.00), the Agreement shall be subject to the examination and audit of the State Auditor, at the request of Agency or as part of any audit of the Agency, for a period of three (3) years after final payment under the Agreement.

9.4 **Confidential Information and Disclosure.**

9.4.1 **Confidential Information.** The term "Confidential Information", as used herein, shall mean any and all confidential, proprietary, or trade secret information, whether written, recorded, electronic, oral or otherwise, where the Confidential Information is made available in a tangible medium of expression and marked in a prominent location as confidential, proprietary and/or trade secret information. Confidential Information shall

not include information that: (a) was already known to the Receiving Party or is otherwise a matter of public knowledge, (b) was disclosed to Receiving Party by a third party without violating any confidentiality agreement, (c) was independently developed by Receiving Party without reverse engineering, as evidenced by written records thereof, or (d) was not marked as confidential Information in accordance with this section.

9.4.2 **Non-Disclosure of Confidential Information**. During the term of this Agreement, either party may disclose ("The Disclosing Party") confidential Information to the other party ("the Receiving Party"). The Receiving Party: (a) shall hold the Disclosing Party's Confidential Information in confident; and (b) shall take all reasonable steps to prevent any unauthorized possession, use, copying, transfer or disclosure of such Confidential Information.

9.4.3 **Permitted Disclosure.** Notwithstanding the foregoing, the following disclosures of Confidential Information are allowed. Receiving Party shall endeavor to provide prior written notice to Disclosing Party of any permitted disclosure made pursuant to Section 9.4.3.2 or 9.4.3.3. Disclosing Party may seek a protective order, including without limitation, a temporary restraining order to prevent or contest such permitted disclosure; provided, however, that Disclosing Party shall seek such remedies at its sole expense. Neither party shall have any liability for such permitted disclosures:

9.4.3.1 Disclosure to employees, agents, consultants, contractors, subcontractors or other representatives of Receiving Party that have a need to know in connection with this Agreement.

9.4.3.2 Disclosure in response to a valid order of a court, government or regulatory agency or as may otherwise be required by law; and

9.4.3.3 Disclosure by Agency in response to a request pursuant to the California Public Records Act.

9.4.4 **Handling of Confidential Information**. Upon conclusion or termination of the Agreement, Receiving Party shall return to Disclosing Party or destroy Confidential Information (including all copies thereof), if requested by Disclosing Party in writing. Notwithstanding the foregoing, the Receiving Party may retain copies of such Confidential Information, subject to the confidentiality provisions of this Agreement: (a) for archival purposes in its computer system; (b) in its legal department files; and (c) in files of Receiving Party's representatives where such copies are necessary to comply with applicable law. Party shall not disclose the Disclosing Party's Information to any person other than those of the Receiving Party's employees, agents, consultants, contractors and

subcontractors who have a need to know in connection with this Agreement.

Section 10. MISCELLANEOUS PROVISIONS.

10.1 Attorneys' Fees. If a party to this Agreement brings any action, including an action for declaratory relief, to enforce or interpret the provision of this Agreement, the prevailing party shall be entitled to reasonable attorneys' fees in addition to any other relief to which that party may be entitled. The court may set such fees in the same action or in a separate action brought for that purpose.

10.2 Venue. In the event that either party brings any action against the other under this Agreement, the Parties agree that trial of such action shall be vested exclusively in the state courts of California in the County of Placer or in the United States District Court for the Eastern District of California.

10.3 Severability. If a court of competent jurisdiction finds or rules that any provision of this Agreement is invalid, void, or unenforceable, the provisions of this Agreement not so adjudged shall remain in full force and effect. The invalidity in whole or in part of any provision of this Agreement shall not void or affect the validity of any other provision of this Agreement.

10.4 No Implied Waiver of Breach. The waiver of any breach of a specific provision of this Agreement does not constitute a waiver of any other breach of that term or any other term of this Agreement.

10.5 Successors and Assigns. The provisions of this Agreement shall inure to the benefit of and shall apply to and bind the successors and assigns of the Parties.

10.6 Conflict of Interest. Consultant may serve other clients, but none whose activities within the corporate limits of Agency or whose business, regardless of location, would place Consultant in a "conflict of interest," as that term is defined in the Political Reform Act, codified at California Government Code Section 81000 *et seq.*

Consultant shall not employ any Agency official in the work performed pursuant to this Agreement. No officer or employee of Agency shall have any financial interest in this Agreement that would violate California Government Code Sections 1090 *et seq.*

10.7 Contract Administrator. This Agreement shall be administered by Jane Cirrincione, Assistant General Manager, or his/her designee, who shall act as the Agency's representative. All correspondence shall be directed to or through the representative.

10.8 Notices. Any written notice to Consultant shall be sent to:

George Dimotakis
President
Pat Davis Design Group, Inc.
333 University Ave, Suite 200
Sacramento, CA 95825

Any written notice to Agency shall be sent to:

Randy S. Howard
General Manager
Northern California Power Agency
651 Commerce Drive
Roseville, CA 95678

With a copy to:

Jane E. Luckhardt
General Counsel
Northern California Power Agency
651 Commerce Drive
Roseville, CA 95678

10.9 **Professional Seal.** Where applicable in the determination of the Agency, the first page of a technical report, first page of design specifications, and each page of construction drawings shall be stamped/sealed and signed by the licensed professional responsible for the report/design preparation.

10.10 **Integration; Incorporation.** This Agreement, including all the exhibits attached hereto, represents the entire and integrated agreement between Agency and Consultant and supersedes all prior negotiations, representations, or agreements, either written or oral. All exhibits attached hereto are incorporated by reference herein.

10.11 **Alternative Dispute Resolution**. If any dispute arises between the Parties that cannot be settled after engaging in good faith negotiations, Agency and Consultant agree to resolve the dispute in accordance with the following:

10.11.1 Each party shall designate a senior management or executive level representative to negotiate any dispute;

10.11.2 The representatives shall attempt, through good faith negotiations, to resolve the dispute by any means within their authority.

10.11.3 If the issue remains unresolved after fifteen (15) days of good faith negotiations, the Parties shall attempt to resolve the disagreement by negotiation between legal counsel. If the above process fails,

the Parties shall resolve any remaining disputes through mediation to expedite the resolution of the dispute.

10.11.4 The mediation process shall provide for the selection within fifteen (15) days by both Parties of a disinterested third person as mediator, shall be commenced within thirty (30) days and shall be concluded within fifteen (15) days from the commencement of the mediation.

10.11.5 The Parties shall equally bear the costs of any third party in any alternative dispute resolution process.

10.11.6 The alternative dispute resolution process is a material condition to this Agreement and must be exhausted as an administrative prior to either Party initiating legal action. This alternative dispute resolution process is not intended to nor shall be construed to change the time periods for filing a claim or action specified by Government Code §§ 900 *et seq.*

10.12 Controlling Provisions. In the case of any conflict between the terms of this Agreement and the Exhibits hereto, a Purchase Order, or Consultant's Proposal (if any), the Agreement shall control. In the case of any conflict between the Exhibits hereto and a Purchase Order or the Consultant's Proposal, the Exhibits shall control. In the case of any conflict between the terms of a Purchase Order and the Consultant's Proposal, the Purchase Order shall control.

10.13 Counterparts. This Agreement may be executed in multiple counterparts, each of which shall be an original and all of which together shall constitute one agreement.

10.14 Construction of Agreement. Each party hereto has had an equivalent opportunity to participate in the drafting of the Agreement and/or to consult with legal counsel. Therefore, the usual construction of an agreement against the drafting party shall not apply hereto.

10.15 No Third Party Beneficiaries. This Agreement is made solely for the benefit of the parties hereto, with no intent to benefit any non-signator third parties. However, should Consultant provide Services to an Agency member, SCCPA and/or a SCPPA member (collectively for the purposes of this section only "Member") pursuant to section 1.4, the parties recognize that such Member may be a third party beneficiary solely as to the Purchase Order and Requested Services relating to such Member.

The Parties have executed this Agreement as of the date signed by the Agency.

NORTHERN CALIFORNIA POWER AGENCY	PAT DAVIS DESIGN GROUP, INC.
Date_____	Date_____
_____	_____
RANDY S. HOWARD, GENERAL MANAGER	**GEORGE DIMOTAKIS, PRESIDENT**

Attest:

_____
Assistant Secretary of the Commission

Approved as to Form:

_____
Jane E. Luckhardt, General Counsel

EXHIBIT A

SCOPE OF SERVICES

Pat Davis Design Group, Inc. ("Consultant") shall provide graphic design services, as requested by the Northern California Power Agency ("Agency"), on its behalf or on behalf of its Members, Southern California Public Power Authority ("SCPPA"), or SCPPA Members. Materials developed for NCPA under the scope of the agreement may be shared and used by NCPA Members for commercial purposes. In some cases, NCPA may request the creation of designs that can be rebranded by NCPA Members for their individual use.

The Consultant will provide the following general services, to be customized as needed by the requesting entity:

1. General Graphic Design Services
    - Design templates in InDesign, Photoshop, Adobe Illustrator, as required
    - Create custom brochures, conference agendas/programs, flow charts, models, illustrations, and other graphics
    - Create content for customer education and outreach campaigns
    - Import content into approved templates
    - Create unique marketing and communications collateral, as needed. Examples include: one-sheeters/fact sheets, brochures, posters, event designs (logos, signage, designs for promotional materials), evites/emails, banners, business cards, fliers, templates, reports, and social media graphics
    - Provide photography retouching and editing
    - Provide final compilation of documents in print and/or electronic formats (e.g. PDF, JPEG, GIF, PNG, PSD, EPS, or other design file formats) as needed and specified for each project

2. Presentation Graphics
    - Design presentation templates in deck slide software (e.g., PowerPoint)
    - Create custom flow charts, models, illustrations, and other graphics
    - Import content into approved template
    - Develop supplementary materials, such as handouts and creative leave-behinds
    - Provide final compilation of documents in print and/or electronic formats as needed

3. Special Projects
    - Website design
    - Support for the development of promotional videos

- Complex visual representation of information and/or processes (including infographics)
- Interface and coordinate with third party vendors, (e.g. printer companies, signage companies, translation services)
- Instruction on printing and use of in-house copy machines for NCPA staff for those projects that can be finalized in-house at NCPA.

EXHIBIT B

COMPENSATION SCHEDULE AND HOURLY FEES

Compensation for all tasks, including hourly fees and expenses, shall not exceed $250,000.00. The hourly rates and or compensation break down and an estimated amount of expenses is as follows:

Services available at an hourly rate of $95:

- Graphic Design and Creative Services
- Copywriting, Editing, and Proofreading
- Print Management
- Strategic Planning
- Customer Infographics and Illustrations
- Website Design and Development
- Photoshop and Photo Editing
- Project Management
- Marketing Communications and Strategy
- Media Planning and Placement

Rates will not increase for the entire contract duration, including all renewal periods.

In the event any hard costs are to be charged beyond those identified in the itemized project budget, Pat Davis Design Group will obtain client approval prior to incurring any additional expense.

Pat Davis Design Group can work on a monthly retainer basis.

NOTE: As a public agency, NCPA shall not reimburse Consultant for travel, food and related costs in excess of those permitted by the Internal Revenue Service.

19

A PUBLIC AGENCY
NCPA
NORTHERN CALIFORNIA POWER AGENCY

Commission Staff Report

COMMISSION MEETING DATE: August 26, 2021

SUBJECT: Flynn Resource Consultants, Inc. – Five Year Multi-Task Consulting Services Agreement for professional consulting services related to electric transmission, power generation, regulatory support, contracts, compliance and electric market issues affecting Electrical Power Utilities and/or entities' large electrical power consumers; Applicable to the following: All Northern California Power Agency (NCPA) Facilities, NCPA Members, Southern California Public Power Authority (SCPPA), and SCPPA Members

AGENDA CATEGORY: Consent

FROM:	Mike Whitney Industry Restructuring Manager	**METHOD OF SELECTION:** *N/A*
Division:	Power Management	*If other, please describe:*
Department:	Industry Restructuring	

IMPACTED MEMBERS:

All Members	☒	**City of Lodi**	☐	**City of Shasta Lake**	☐
Alameda Municipal Power	☐	**City of Lompoc**	☐	**City of Ukiah**	☐
San Francisco Bay Area Rapid Transit	☐	**City of Palo Alto**	☐	**Plumas-Sierra REC**	☐
City of Biggs	☐	**City of Redding**	☐	**Port of Oakland**	☐
City of Gridley	☐	**City of Roseville**	☐	**Truckee Donner PUD**	☐
City of Healdsburg	☐	**City of Santa Clara**	☐	**Other**	☐

If other, please specify _____

_____

SR: 205:21

RECOMMENDATION:

Approve Resolution 21-82 authorizing the General Manager or his designee to enter into a Multi-Task Consulting Services Agreement with Flynn Resource Consultants, Inc., (Flynn RCI) for services related to electric transmission, power generation, regulatory support, contracts, compliance, and electric market issues, with any non-substantial changes recommended and approved by the NCPA General Counsel, which shall not exceed $3,000,000 over five years for use at all facilities owned and/or operated by NCPA, its members, by the Southern California Public Power Authority ("SCPPA"), or by SCPPA members.

BACKGROUND:

Ever changing and evolving electric transmission, generation, regulatory, contracts, compliance and market issues impact NCPA, SCPPA, and our members. Flynn RCI offers a host of these services to assist NCPA, SCPPA, and our members with issues resulting from said changes. NCPA has an existing agreement with this vendor that expires on August 17, 2021 and seeks to put this new enabling agreement in place to continue shared services.

FISCAL IMPACT:

The total cost of the agreement is not-to-exceed $3,000,000 over five years to be used out of NCPA approved budgets as services are rendered. NCPA will bid the specific scope of work consistent with NCPA procurement policies and procedures. Purchase orders referencing the terms and conditions of the Agreement will be issued following NCPA procurement policies and procedures.

ENVIRONMENTAL ANALYSIS:

This activity would not result in a direct or reasonably foreseeable indirect change in the physical environment and is therefore not a "project" for purposes of Section 21065 the California Environmental Quality Act. No environmental review is necessary.

COMMITTEE REVIEW:

On August 4, 2021, the Facilities Committee reviewed and endorsed the recommendation above for Commission approval.

Respectfully submitted,

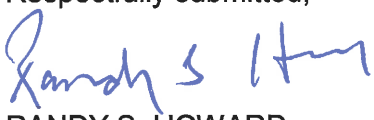

RANDY S. HOWARD
General Manager

Attachments:
- Resolution 21-82
- Multi-Task Consulting Services Agreement with Flynn Resource Consultants, Inc.

SR: 205:21

RESOLUTION 21-82

RESOLUTION OF THE NORTHERN CALIFORNIA POWER AGENCY APPROVING A MULTI-TASK CONSULTING SERVICES AGREEEMENT WITH FLYNN RESOURCE CONSULTANTS, INC.

(reference Staff Report #205:21)

WHEREAS, ever changing and evolving electric transmission, generation, regulatory, contract, compliance and market issues impact the Northern California Power Agency (NCPA), its members, the Southern California Public Power Authority (SCPPA), and SCPPA members; and

WHEREAS, Flynn Resource Consultants, Inc. offers a host of services to assist NCPA, SCPPA and our members with issues resulting from said changes; and

WHEREAS, on August 4, 2021, the Facilities Committee recommended for Commission approval the agreement with Flynn RCI in an amount not to exceed $3,000,000 over five years; and

WHEREAS, this activity would not result in a direct or reasonably foreseeable indirect change in the physical environment and is therefore, not a "project" for purposes of Section 21065 the California Environmental Quality Act. No environmental review is necessary; and

NOW, THEREFORE BE IT RESOLVED, that the Commission of the Northern California Power Agency authorizes the General Manager, or his designee, to enter into a Multi-Task Consulting Services Agreement with Flynn Resource Consultants, Inc., for services related to electric transmission, power generation, regulatory support, contracts, compliance, and electric market issues, with any non-substantial changes recommended and approved by the NCPA General Counsel, which shall not exceed $3,000,000 over five years for use at all facilities owned and/or operated by NCPA, its members, by the Southern California Public Power Authority (SCPPA), or by SCPPA members.

PASSED, ADOPTED and APPROVED this ____ day of _____, 2021, by the following vote on roll call:

	Vote	Abstained	Absent
Alameda			
San Francisco BART			
Biggs			
Gridley			
Healdsburg			
Lodi			
Lompoc			
Palo Alto			
Port of Oakland			
Redding			
Roseville			
Santa Clara			
Shasta Lake			
Truckee Donner			
Ukiah			
Plumas-Sierra			

DAVID HAGELE
CHAIR

ATTEST: CARY A. PADGETT
ASSISTANT SECRETARY

MULTI-TASK CONSULTING SERVICES AGREEMENT BETWEEN THE NORTHERN CALIFORNIA POWER AGENCY AND FLYNN RESOURCE CONSULTANTS, INC.

This Consulting Services Agreement ("Agreement') is made by and between the Northern California Power Agency, a joint powers agency with its main office located at 651 Commerce Drive, Roseville, CA 95678-6420 ("Agency") and Flynn Resource Consultants, Inc., a California Corporation with its office located at 5440 Edgeview Drive, Discovery Bay, CA 94505 ("Consultant") (together sometimes referred to as the "Parties") as of _____, 2021 ("Effective Date") in Roseville, California.

Section 1. **SERVICES**. Subject to the terms and conditions set forth in this Agreement, Consultant shall provide to Agency the services described in the Scope of Services attached hereto as Exhibit A and incorporated herein ("Services"), at the time and place and in the manner specified therein.

1.1 **Term of Agreement.** The term of this Agreement shall begin on the Effective Date and shall end when Consultant completes the Services, or no later than five (5) year from the date this Agreement was signed by Agency, whichever is shorter.

1.2 **Standard of Performance.** Consultant shall perform the Services in the manner and according to the standards observed by a competent practitioner of the profession in which Consultant is engaged and for which Consultant is providing the Services. Consultant represents that it is licensed, qualified and experienced to provide the Services set forth herein.

1.3 **Assignment of Personnel.** Consultant shall assign only competent personnel to perform the Services. In the event that Agency, in its sole discretion, at any time during the term of this Agreement, requests the reassignment of any such personnel, Consultant shall, immediately upon receiving written notice from Agency of such request, reassign such personnel.

1.4 **Services Provided.** Services provided under this Agreement by Consultant may include Services directly to the Agency or, as requested by the Agency and consistent with the terms of this Agreement, to Agency members, Southern California Public Power Authority ("SCPPA") or SCPPA members.

1.5 **Request for Services.** At such time that Agency determines to use Consultant's Services under this Agreement, Agency shall issue a Purchase Order. The Purchase Order shall identify the specific services to be performed ("Requested Services"), may include a not-to-exceed monetary cap on Requested Services and expenditures authorized by that Purchase Order, and a time by which the Requested Services shall be completed. Consultant shall have seven calendar days from the date of the Agency's issuance of the Purchase Order in which to respond in writing that Consultant chooses not to perform the Requested Services. If Consultant agrees to perform the Requested Services, begins to perform the Requested Services, or does not respond within the seven day

period specified, then Consultant will have agreed to perform the Requested Services on the terms set forth in the Purchase Order, this Agreement and its Exhibits.

Section 2. COMPENSATION. Agency hereby agrees to pay Consultant an amount **NOT TO EXCEED** three million dollars ($3,000,000) for the Services, which shall include all fees, costs, expenses and other reimbursables, as set forth in Consultant's fee schedule, attached hereto and incorporated herein as Exhibit B. This dollar amount is not a guarantee that Agency will pay that full amount to the Consultant, but is merely a limit of potential Agency expenditures under this Agreement.

2.1 Invoices. Consultant shall submit invoices, not more often than once a month during the term of this Agreement, based on the cost for services performed and reimbursable costs incurred prior to the invoice date. Invoices shall contain the following information:

- The beginning and ending dates of the billing period;
- Services performed;
- The Purchase Order number authorizing the Services;
- At Agency's option, the total number of hours of work performed under the Agreement by Consultant and each employee, agent, and subcontractor of Consultant performing services hereunder; and
- At Agency's option, when the Consultant's Scope of Work identifies tasks, for each work item in each task, a copy of the applicable time entries showing the name of the person doing the work, the hours spent by each person, a brief description of the work, and each reimbursable expense, with supporting documentation, to Agency's reasonable satisfaction.

Invoices shall be sent to:

Northern California Power Agency
651 Commerce Drive
Roseville, California 95678
Attn: Accounts Payable
AcctsPayable@ncpa.com

2.2 Monthly Payment. Agency shall make monthly payments, based on invoices received, for services satisfactorily performed, and for authorized reimbursable costs incurred. Agency shall have thirty (30) days from the receipt of an invoice that complies with all of the requirements above to pay Consultant.

2.3 Payment of Taxes. Consultant is solely responsible for the payment of all federal, state and local taxes, including employment taxes, incurred under this Agreement.

2.4 **Authorization to Perform Services.** The Consultant is not authorized to perform any Services or incur any costs whatsoever under the terms of this Agreement until receipt of written authorization from the Contract Administrator.

2.5 **Timing for Submittal of Final Invoice.** Consultant shall have ninety (90) days after completion of its Services to submit its final invoice for the Requested Services. In the event Consultant fails to submit an invoice to Agency for any amounts due within the ninety (90) day period, Consultant is deemed to have waived its right to collect its final payment from Agency.

Section 3. FACILITIES AND EQUIPMENT. Except as set forth herein, Consultant shall, at its sole cost and expense, provide all facilities and equipment that may be necessary to perform the Services.

Section 4. INSURANCE REQUIREMENTS. Before beginning any work under this Agreement, Consultant, at its own cost and expense, shall procure the types and amounts of insurance listed below and shall maintain the types and amounts of insurance listed below for the period covered by this Agreement.

4.1 **Workers' Compensation.** If Consultant employs any person, Consultant shall maintain Statutory Workers' Compensation Insurance and Employer's Liability Insurance for any and all persons employed directly or indirectly by Consultant with limits of not less than one million dollars ($1,000,000.00) per accident.

4.2 **Commercial General and Automobile Liability Insurance.**

4.2.1 **Commercial General Insurance.** Consultant shall maintain commercial general liability insurance for the term of this Agreement, including products liability, covering any loss or liability, including the cost of defense of any action, for bodily injury, death, personal injury and broad form property damage which may arise out of the operations of Consultant. The policy shall provide a minimum limit of $2,000,000 per occurrence/$2,000,000 aggregate. Commercial general coverage shall be at least as broad as ISO Commercial General Liability form CG 0001 (current edition) on "an occurrence" basis covering comprehensive General Liability, with a self-insured retention or deductible of no more than $100,000. No endorsement shall be attached limiting the coverage.

4.2.2 **Automobile Liability.** Consultant shall maintain automobile liability insurance form CA 0001 (current edition) for the term of this Agreement covering any loss or liability, including the cost of defense of any action, arising from the operation, maintenance or use of any vehicle (symbol 1), whether or not owned by the Consultant, on or off Agency premises. The policy shall provide a minimum limit of $2,000,000 per each accident, with a self-insured retention or deductible of no more than $100,000. This insurance shall provide contractual liability covering all motor vehicles and

mobile equipment to the extent coverage may be excluded from general liability insurance.

4.2.3 **General Liability/Umbrella Insurance.** The coverage amounts set forth above may be met by a combination of underlying and umbrella policies as long as in combination the limits equal or exceed those stated.

4.3 **Professional Liability Insurance.** Not Applicable.

4.4 **All Policies Requirements.**

4.4.1 **Verification of coverage.** Prior to beginning any work under this Agreement, Consultant shall provide Agency with (1) a Certificate of Insurance that demonstrates compliance with all applicable insurance provisions contained herein and (2) policy endorsements to the policies referenced in Section 4.2, adding the Agency as an additional insured and declaring such insurance primary in regard to work performed pursuant to this Agreement.

4.4.2 **Notice of Reduction in or Cancellation of Coverage.** Consultant shall provide at least thirty (30) days prior written notice to Agency of any reduction in scope or amount, cancellation, or modification adverse to Agency of the policies referenced in Section 4.

4.4.3 **Higher Limits.** If Consultant maintains higher limits than the minimums specified herein, the Agency shall be entitled to coverage for the higher limits maintained by the Consultant.

4.4.4 **Additional Certificates and Endorsements.** If Consultant provides services to Agency members, SCPPA, and/or SCPPA members pursuant to this Agreement, Consultant shall provide certificates of insurance and policy endorsements, as referenced in Section 4.4.1, naming the specific Agency member, SCPPA or SCPPA member.

4.4.5 **Waiver of Subrogation.** Consultant agrees to waive subrogation which any insurer of Consultant may acquire from Consultant by virtue of the payment of any loss. Consultant agrees to obtain any endorsement that may be necessary to effect this waiver of subrogation. In addition, the Workers' Compensation policy shall be endorsed with a waiver of subrogation in favor of Agency for all work performed by Consultant, its employees, agents and subcontractors.

4.5 **Consultant's Obligation.** Consultant shall be solely responsible for ensuring that all equipment, vehicles and other items utilized in the performance of Services are operated, provided or otherwise utilized in a manner that ensues they are and remain covered by the policies referenced in Section 4 during this

Agreement. Consultant shall also ensure that all workers involved in the provision of Services are properly classified as employees, agents or independent contractors and are and remain covered by any and all workers' compensation insurance required by applicable law during this Agreement.

Section 5. INDEMNIFICATION AND CONSULTANT'S RESPONSIBILITIES.

5.1 Effect of Insurance. Agency's acceptance of insurance certificates and endorsements required under this Agreement does not relieve Consultant from liability under this indemnification and hold harmless clause. This indemnification and hold harmless clause shall apply to any damages or claims for damages whether or not such insurance policies shall have been determined to apply. By execution of this Agreement, Consultant acknowledges and agrees to the provisions of this Section and that it is a material element of consideration.

5.2 Scope. Consultant shall indemnify, defend with counsel reasonably acceptable to the Agency, and hold harmless the Agency, and its officials, commissioners, officers, employees, agents and volunteers from and against all losses, liabilities, claims, demands, suits, actions, damages, expenses, penalties, fines, costs (including without limitation costs and fees of litigation), judgments and causes of action of every nature arising out of or in connection with any acts or omissions by Consultant, its officers, officials, agents, and employees, except as caused by the sole or gross negligence of Agency. Notwithstanding, should this Agreement be construed as a construction agreement under Civil Code section 2783, then the exception referenced above shall also be for the active negligence of Agency.

Section 6. STATUS OF CONSULTANT.

6.1 Independent Contractor. Consultant is an independent contractor and not an employee of Agency. Agency shall have the right to control Consultant only insofar as the results of Consultant's Services and assignment of personnel pursuant to Section 1; otherwise, Agency shall not have the right to control the means by which Consultant accomplishes Services rendered pursuant to this Agreement. Notwithstanding any other Agency, state, or federal policy, rule, regulation, law, or ordinance to the contrary, Consultant and any of its employees, agents, and subcontractors providing services under this Agreement shall not qualify for or become entitled to, and hereby agree to waive any and all claims to, any compensation, benefit, or any incident of employment by Agency, including but not limited to eligibility to enroll in the California Public Employees Retirement System (PERS) as an employee of Agency and entitlement to any contribution to be paid by Agency for employer contributions and/or employee contributions for PERS benefits.

Consultant shall indemnify, defend, and hold harmless Agency for the payment of any employee and/or employer contributions for PERS benefits on behalf of

Consultant or its employees, agents, or subcontractors, as well as for the payment of any penalties and interest on such contributions, which would otherwise be the responsibility of Agency. Consultant and Agency acknowledge and agree that compensation paid by Agency to Consultant under this Agreement is based upon Consultant's estimated costs of providing the Services, including salaries and benefits of employees, agents and subcontractors of Consultant.

Consultant shall indemnify, defend, and hold harmless Agency from any lawsuit, administrative action, or other claim for penalties, losses, costs, damages, expense and liability of every kind, nature and description that arise out of, pertain to, or relate to such claims, whether directly or indirectly, due to Consultant's failure to secure workers' compensation insurance for its employees, agents, or subcontractors.

Consultant agrees that it is responsible for the provision of group healthcare benefits to its fulltime employees under 26 U.S.C. § 4980H of the Affordable Care Act. To the extent permitted by law, Consultant shall indemnify, defend and hold harmless Agency from any penalty issued to Agency under the Affordable Care Act resulting from the performance of the Services by any employee, agent, or subcontractor of Consultant.

6.2 **Consultant Not Agent.** Except as Agency may specify in writing, Consultant shall have no authority, express or implied, to act on behalf of Agency in any capacity whatsoever as an agent. Consultant shall have no authority, express or implied, pursuant to this Agreement to bind Agency to any obligation whatsoever.

6.3 **Assignment and Subcontracting.** This Agreement contemplates personal performance by Consultant and is based upon a determination of Consultant's unique professional competence, experience, and specialized professional knowledge. A substantial inducement to Agency for entering into this Agreement was and is the personal reputation and competence of Consultant. Consultant may not assign this Agreement or any interest therein without the prior written approval of the Agency. Consultant shall not subcontract any portion of the performance contemplated and provided for herein, other than to the subcontractors identified in Exhibit A, without prior written approval of the Agency. Where written approval is granted by the Agency, Consultant shall supervise all work subcontracted by Consultant in performing the services and shall be responsible for all work performed by a subcontractor as if Consultant itself had performed such work. The subcontracting of any work to subcontractors shall not relieve Consultant from any of its obligations under this Agreement with respect to the services and Consultant is obligated to ensure that any and all subcontractors performing any services shall be fully insured in all respects and to the same extent as set forth under Section 4, to Agency's satisfaction.

6.4 **Certification as to California Energy Commission.** If requested by the Agency, Consultant shall, at the same time it executes this Agreement, execute Exhibit C.

Section 7. LEGAL REQUIREMENTS.

7.1 **Governing Law.** The laws of the State of California shall govern this Agreement.

7.2 **Compliance with Applicable Laws.** Consultant and its subcontractors and agents, if any, shall comply with all laws applicable to the performance of the work hereunder.

7.3 **Licenses and Permits.** Consultant represents and warrants to Agency that Consultant and its employees, agents, and subcontractors (if any) have and will maintain at their sole expense during the term of this Agreement all licenses, permits, qualifications, and approvals of whatever nature that are legally required to practice their respective professions.

Section 8. TERMINATION AND MODIFICATION.

8.1 **Termination.** Agency may cancel this Agreement at any time and without cause upon ten (10) days prior written notice to Consultant.

In the event of termination, Consultant shall be entitled to compensation for Services satisfactorily completed as of the effective date of termination; Agency, however, may condition payment of such compensation upon Consultant delivering to Agency any or all records or documents, as referenced in Section 9.1 hereof.

8.2 **Amendments.** The Parties may amend this Agreement only by a writing signed by all the Parties.

8.3 **Survival.** All obligations arising prior to the termination of this Agreement and all provisions of this Agreement allocating liability between Agency and Consultant shall survive the termination of this Agreement.

8.4 **Options upon Breach by Consultant.** If Consultant materially breaches any of the terms of this Agreement, including but not limited to those set forth in Section 4, Agency's remedies shall include, but not be limited to, the following:

8.4.1 Immediately terminate the Agreement;

8.4.2 Retain the plans, specifications, drawings, reports, design documents, and any other work product prepared by Consultant pursuant to this Agreement;

8.4.3 Retain a different consultant to complete the Services not finished by Consultant; and/or

Section 9. KEEPING AND STATUS OF RECORDS.

9.1 **Records Created as Part of Consultant's Performance.** All reports, data, maps, models, charts, studies, surveys, photographs, memoranda, plans, studies, specifications, records, files, or any other documents or materials, in electronic or any other form, that Consultant prepares or obtains pursuant to this Agreement and that relate to the matters covered hereunder shall be the property of the Agency. Consultant hereby agrees to deliver those documents to the Agency upon termination of the Agreement. Agency and Consultant agree that, unless approved by Agency in writing, Consultant shall not release to any non-parties to this Agreement any data, plans, specifications, reports and other documents.

9.2 **Consultant's Books and Records.** Consultant shall maintain any and all records or other documents evidencing or relating to charges for Services or expenditures and disbursements charged to the Agency under this Agreement for a minimum of three (3) years, or for any longer period required by law, from the date of final payment to the Consultant to this Agreement.

9.3 **Inspection and Audit of Records.** Any records or documents that this Agreement requires Consultant to maintain shall be made available for inspection, audit, and/or copying at any time during regular business hours, upon oral or written request of the Agency. Under California Government Code Section 8546.7, if the amount of public funds expended under this Agreement exceeds ten thousand dollars ($10,000.00), the Agreement shall be subject to the examination and audit of the State Auditor, at the request of Agency or as part of any audit of the Agency, for a period of three (3) years after final payment under the Agreement.

9.4 **Confidential Information and Disclosure.**

9.4.1 **Confidential Information.** The term "Confidential Information", as used herein, shall mean any and all confidential, proprietary, or trade secret information, whether written, recorded, electronic, oral or otherwise, where the Confidential Information is made available in a tangible medium of expression and marked in a prominent location as confidential, proprietary and/or trade secret information. Confidential Information shall not include information that: (a) was already known to the Receiving Party or is otherwise a matter of public knowledge, (b) was disclosed to Receiving Party by a third party without violating any confidentiality agreement, (c) was independently developed by Receiving Party without

reverse engineering, as evidenced by written records thereof, or (d) was not marked as confidential Information in accordance with this section.

9.4.2 **Non-Disclosure of Confidential Information**. During the term of this Agreement, either party may disclose ("The Disclosing Party") confidential Information to the other party ("the Receiving Party"). The Receiving Party: (a) shall hold the Disclosing Party's Confidential Information in confidence; and (b) shall take all reasonable steps to prevent any unauthorized possession, use, copying, transfer or disclosure of such Confidential Information.

9.4.3 **Permitted Disclosure.** Notwithstanding the foregoing, the following disclosures of Confidential Information are allowed. Receiving Party shall endeavor to provide prior written notice to Disclosing Party of any permitted disclosure made pursuant to Section 9.4.3.2 or 9.4.3.3. Disclosing Party may seek a protective order, including without limitation, a temporary restraining order to prevent or contest such permitted disclosure; provided, however, that Disclosing Party shall seek such remedies at its sole expense. Neither party shall have any liability for such permitted disclosures:

9.4.3.1 Disclosure to employees, agents, consultants, contractors, subcontractors or other representatives of Receiving Party that have a need to know in connection with this Agreement.

9.4.3.2 Disclosure in response to a valid order of a court, government or regulatory agency or as may otherwise be required by law; and

9.4.3.3 Disclosure by Agency in response to a request pursuant to the California Public Records Act.

9.4.4 **Handling of Confidential Information**. Upon conclusion or termination of the Agreement, Receiving Party shall return to Disclosing Party or destroy Confidential Information (including all copies thereof), if requested by Disclosing Party in writing. Notwithstanding the foregoing, the Receiving Party may retain copies of such Confidential Information, subject to the confidentiality provisions of this Agreement: (a) for archival purposes in its computer system; (b) in its legal department files; and (c) in files of Receiving Party's representatives where such copies are necessary to comply with applicable law. Party shall not disclose the Disclosing Party's Information to any person other than those of the Receiving Party's employees, agents, consultants, contractors and subcontractors who have a need to know in connection with this Agreement.

Section 10. MISCELLANEOUS PROVISIONS.

10.1 **Attorneys' Fees.** If a party to this Agreement brings any action, including an action for declaratory relief, to enforce or interpret the provision of this Agreement, the prevailing party shall be entitled to reasonable attorneys' fees in addition to any other relief to which that party may be entitled. The court may set such fees in the same action or in a separate action brought for that purpose.

10.2 **Venue.** In the event that either party brings any action against the other under this Agreement, the Parties agree that trial of such action shall be vested exclusively in the state courts of California in the County of Placer or in the United States District Court for the Eastern District of California.

10.3 **Severability.** If a court of competent jurisdiction finds or rules that any provision of this Agreement is invalid, void, or unenforceable, the provisions of this Agreement not so adjudged shall remain in full force and effect. The invalidity in whole or in part of any provision of this Agreement shall not void or affect the validity of any other provision of this Agreement.

10.4 **No Implied Waiver of Breach.** The waiver of any breach of a specific provision of this Agreement does not constitute a waiver of any other breach of that term or any other term of this Agreement.

10.5 **Successors and Assigns.** The provisions of this Agreement shall inure to the benefit of and shall apply to and bind the successors and assigns of the Parties.

10.6 **Conflict of Interest.** Consultant may serve other clients, but none whose activities within the corporate limits of Agency or whose business, regardless of location, would place Consultant in a "conflict of interest," as that term is defined in the Political Reform Act, codified at California Government Code Section 81000 *et seq.*

Consultant shall not employ any Agency official in the work performed pursuant to this Agreement. No officer or employee of Agency shall have any financial interest in this Agreement that would violate California Government Code Sections 1090 *et seq.*

10.7 **Contract Administrator.** This Agreement shall be administered by Michael Whitney, Power Contracts and Industry Restructuring Manager, or his/her designee, who shall act as the Agency's representative. All correspondence shall be directed to or through the representative.

10.8 **Notices.** Any written notice to Consultant shall be sent to:

Doug Boccignone
President

Flynn Resource Consultants Inc.
5440 Edgeview Drive
Discovery Bay, CA 94505

Any written notice to Agency shall be sent to:

Randy S. Howard
General Manager
Northern California Power Agency
651 Commerce Drive
Roseville, CA 95678

With a copy to:

Jane E. Luckhardt
General Counsel
Northern California Power Agency
651 Commerce Drive
Roseville, CA 95678

10.9 **Professional Seal.** Where applicable in the determination of the Agency, the first page of a technical report, first page of design specifications, and each page of construction drawings shall be stamped/sealed and signed by the licensed professional responsible for the report/design preparation.

10.10 **Integration; Incorporation.** This Agreement, including all the exhibits attached hereto, represents the entire and integrated agreement between Agency and Consultant and supersedes all prior negotiations, representations, or agreements, either written or oral. All exhibits attached hereto are incorporated by reference herein.

10.11 **Alternative Dispute Resolution**. If any dispute arises between the Parties that cannot be settled after engaging in good faith negotiations, Agency and Consultant agree to resolve the dispute in accordance with the following:

10.11.1 Each party shall designate a senior management or executive level representative to negotiate any dispute;

10.11.2 The representatives shall attempt, through good faith negotiations, to resolve the dispute by any means within their authority.

10.11.3 If the issue remains unresolved after fifteen (15) days of good faith negotiations, the Parties shall attempt to resolve the disagreement by negotiation between legal counsel. If the above process fails, the Parties shall resolve any remaining disputes through mediation to expedite the resolution of the dispute.

10.11.4 The mediation process shall provide for the selection within fifteen (15) days by both Parties of a disinterested third person as mediator, shall be commenced within thirty (30) days and shall be concluded within fifteen (15) days from the commencement of the mediation.

10.11.5 The Parties shall equally bear the costs of any third party in any alternative dispute resolution process.

10.11.6 The alternative dispute resolution process is a material condition to this Agreement and must be exhausted as an administrative prior to either Party initiating legal action. This alternative dispute resolution process is not intended to nor shall be construed to change the time periods for filing a claim or action specified by Government Code §§ 900 *et seq*.

10.12 Controlling Provisions. In the case of any conflict between the terms of this Agreement and the Exhibits hereto, a Purchase Order, or Consultant's Proposal (if any), the Agreement shall control. In the case of any conflict between the Exhibits hereto and a Purchase Order or the Consultant's Proposal, the Exhibits shall control. In the case of any conflict between the terms of a Purchase Order and the Consultant's Proposal, the Purchase Order shall control.

10.13 Counterparts. This Agreement may be executed in multiple counterparts, each of which shall be an original and all of which together shall constitute one agreement.

10.14 Construction of Agreement. Each party hereto has had an equivalent opportunity to participate in the drafting of the Agreement and/or to consult with legal counsel. Therefore, the usual construction of an agreement against the drafting party shall not apply hereto.

10.15 No Third Party Beneficiaries. This Agreement is made solely for the benefit of the parties hereto, with no intent to benefit any non-signator third parties. However, should Consultant provide Services to an Agency member, SCCPA and/or a SCPPA member (collectively for the purposes of this section only "Member") pursuant to section 1.4, the parties recognize that such Member may be a third party beneficiary solely as to the Purchase Order and Requested Services relating to such Member.

The Parties have executed this Agreement as of the date signed by the Agency.

NORTHERN CALIFORNIA POWER AGENCY	FLYNN RESOURCE CONSULTANTS, INC.
Date_____	Date_____
_____	_____
Randy S. Howard, General Manager	**Douglas A. Boccignone, President**

Attest:

_____
Assistant Secretary of the Commission

Approved as to Form:

_____
Jane E. Luckhardt, General Counsel

EXHIBIT A

SCOPE OF SERVICES

FLYNN RCI SCOPE OF SERVICES TO NCPA, SCPPA, AND THEIR MEMBERS

NCPA is entering into this agreement with Flynn Resource Consultants Inc. ("Consultant") so that NCPA, SCPPA, and their members may secure professional consulting services related to electric transmission, power generation, regulatory support, contracts, compliance and electric market issues affecting Electrical Power Utilities and/or entities' large electrical power consumers.

The Consultant may be requested to perform the activities listed below during the term of this Agreement for NCPA, a member, and/or SCPPA if NCPA, member(s), and/or SCPPA agree to terms, condition, and compensation for said detailed scope services. Such activities may also include monitoring, meeting participation, coordinating with affected or other participating parties, and, as necessary, preparing and submitting formal position paper and other documentation.

1. Grid Planning Activities and Transmission Studies
    - California and regional transmission planning activities
    - Power flow, short circuit and dynamic modeling

2. Regionalization Activities
    - CAISO Regionalization Process, Transmission Access Charge, Governance and Resource Adequacy
    - Coordination with the California Municipal Utilities Association and Northern California Power Agency on these activities

3. State Regulatory Matters
    - CEC, CPUC and other western region state commission proceedings

4. Federal Regulatory Matters
    - Interconnection Agreement and Metered Subsystems Agreement Support

5. Electricity Market Issues

6. NERC/WECC Compliance Support

7. Litigation Support and Other Services related to electric transmission, power generation, regulatory support, contracts, compliance and electric markets

EXHIBIT B

COMPENSATION SCHEDULE AND HOURLY FEES

Compensation for all tasks, including hourly fees and expenses, shall not exceed three million dollars ($3,000,000). The hourly rates and or compensation break down and an estimated amount of expenses is as follows:

Consultant hourly rates for the professional services are listed below.

Labor Category	Hourly Rate (FY21-22)
Principal	$350 per hour
Managing Consultant	$330 per hour
Senior Consultant – Power Engineer	$320 per hour
Senior Consultant	$290 per hour
Consultant	$235 per hour
Associate Consultant	$215 per hour
Analyst	$160 per hour
Support Services	$65 per hour

Each year, effective July 1, the applicable hourly rates for each labor category shall increase by 3%, rounded to the nearest $5.

Travel (at coach rates), food, and miscellaneous expenses, except automobile mileage, associated with the provision of services hereunder shall be billed at cost. Automobile mileage will be billed at the rate approved by the Internal Revenue Service.

For any month in which specialized modeling software is used to perform services under this agreement, the following charges shall apply:

Power flow modeling -	$ 310/month
Short circuit modeling -	$ 900 /month
OASIS Data -	$ 1,350 /month
Market modeling -	$ 4,465/month

Each year, effective July 1, the specialized modeling software costs shall increase by 3%, rounded to the nearest $5.
Specialized software costs that exceed the above amounts may be billed with the prior approval of the Agency.

Pricing for services to be performed at NCPA Member or SCPPA locations will be quoted at the time services are requested.

NOTE: As a public agency, NCPA shall not reimburse Consultant for travel, food and related costs in excess of those permitted by the Internal Revenue Service. In addition, NCPA policies prohibit reimbursement for alcohol.

Pricing for services to be performed at NCPA Member or SCPPA locations will be quoted at the time services are requested.

NOTE: As a public agency, NCPA shall not reimburse Consultant for travel, food and related costs in excess of those permitted by the Internal Revenue Service.

20

A PUBLIC AGENCY
NCPA
NORTHERN CALIFORNIA POWER AGENCY

Commission Staff Report

COMMISSION MEETING DATE: August 26, 2021

SUBJECT: Northern California Power Agency (NCPA) Scheduling Coordination Program Agreement Appendix B – Approval of Revised Version 24 of Appendix B

AGENDA CATEGORY: Consent

FROM:	Monty Hanks Assistant General Manager/CFO	**METHOD OF SELECTION:** N/A
Division:	Administrative Services	
Department:	Power Settlements	

IMPACTED MEMBERS:

All Members	☐	**City of Lodi**	☒	**City of Shasta Lake**	☐
Alameda Municipal Power	☒	**City of Lompoc**	☒	**City of Ukiah**	☒
San Francisco Bay Area Rapid Transit	☒	**City of Palo Alto**	☒	**Plumas-Sierra REC**	☒
City of Biggs	☒	**City of Redding**	☐	**Port of Oakland**	☒
City of Gridley	☒	**City of Roseville**	☒	**Truckee Donner PUD**	☐
City of Healdsburg	☒	**City of Santa Clara**	☒	**Other**	☐

If other, please specify

_____

_____

RECOMMENDATION:

Approve Resolution 21-84 implementing a revised Version 24 of Appendix B to the Scheduling Coordination Program Agreement (SCPA), which details the allocation of California Independent System Operator (CAISO) charges and payments to NCPA Members.

BACKGROUND:

The Power Management and Administrative Services Agreement (PMASA) dated October 1, 2014, sets forth the terms and conditions under which NCPA provides contracted services to participants. The PMASA includes the Scheduling Coordination Program Agreement (SCPA), which defines the guidelines through which NCPA provides scheduling coordination services to members who are signatories to the PMASA. Included within the SCPA are several appendices that detail the multiple protocols and procedures associated with NCPA's participation in the CAISO markets with respect to the scheduling, dispatch and financial settlements of members' loads and supply resources. Pursuant to the SCPA, these appendices may be modified, subject to Commission approval, to conform to changes in scheduling protocols and CAISO market settlement rules.

A revised Version 24 of Appendix B to the Scheduling Coordination Program Agreement (SCPA) incorporates updates for several new and retired CAISO settlement charge codes, as well as minor revisions to a couple of charge code descriptions.

The proposed updates to Appendix B are technical in nature as summarized in the table below. A clean and redline version of Appendix B are each available for review on the NCPA Connect extranet website (at connect.ncpa.com).

Appendix B to the SCPA Change Summary Table

Appendix B Section	Change Action	Description
CAISO Settlement Charge Code 7026 for Daily Reliability Cost Allocation Page 123 of redlined version of Appendix B	Update Appendix B document to add CAISO charge code 7026 for allocation of Reliability Must Run (RMR) capacity costs to NCPA, which is allocated to applicable Members in proportion to their respective electric Metered Demand quantities less demand served by Transmission Ownership Rights (TOR). TOR applies specifically to Plumas-Sierra REC for energy import schedules at its Marble Intertie facility.	The CAISO allocates RMR capacity costs each day to Scheduling Coordinators, such as NCPA, based on a scheduling coordinator's load ratio share for reliability services provided to serve either system-wide or specific local Transmission Access Charge (TAC) area. Appendix B applies same allocation basis to Members based on Metered Demand less TOR demand. Charge Code 7026 effective as of 5/1/2020
CAISO Settlement Charge Code 7989 for Invoice Deviation	Documentation update to describe invoice calculation based on CAISO's modified	• This is a document only change to Appendix B.

Appendix B Section	Change Action	Description
Interest Distribution on page 125; and, Charge Code 7999 for Invoice Deviation Interest Allocation on page 128 of red-line version	2021 Market Settlement Timeline process change.	• Appendix B updated to indicate interest calculation is performed based on the CAISO's modified timing of its Initial and Recalculated settlement statements that occurs at nine (9) and seventy (70) business days, respectively, after the applicable trade date.
CAISO Settlement Charge Code 6456 for Intertie Deviation Settlement Page 156 of redlined version of Appendix B	Update Appendix B document to add CAISO charge code 6456 for Intertie Deviation Settlement. This is a penalty charge amount that applies to undelivered energy from import or export intertie resources. NCPA estimates, for use as allocators, are based on members' final, real-time intertie schedules. Pool Member allocation for Western Base Resource is based on assigned shares or optimized base resource, or as specified in Deal Manager for other intertie resources.	• Intertie deviation penalty charges are assessed for differences between the awarded Day Ahead energy schedule and the OATI e-tag quantity. • Exception for intertie deviations are *reliability curtailments* that are initiated by the adjacent balancing authority area • Charge Code granularity is an hourly Settlement • Charge Code effective as of 2/1/2021
CAISO Settlement Charge Code 6458 for Intertie Deviation Settlement Allocation Page 157 of redlined version of Appendix B	Update Appendix B document to add CAISO charge code 6458 for allocation of Intertie Deviation Settlement. This is a credit amount allocated to each Member's proportionate share of Measured Demand less demand served by Existing Transmission Contracts (ETC) or TORs.	• This CAISO charge code distributes penalty amounts associated with intertie deviation charges in CC 6456 to scheduling coordinators' Measured Demand (i.e. gross metered demand and export schedules). • Charge Code effective as of 2/1/2021
CAISO Settlement Charge Code 6484 for Hour-Ahead Scheduling Process Uplift Settlement Allocation Page 179 of redlined version of Appendix B	Update Appendix B document to add CAISO charge code 6484 for allocation of Hour-Ahead Scheduling Process Uplift Settlement Allocation. NCPA, as a Load Following Metered Sub-System, is allocated this charge based on 5-minute interval Net Negative Uninstructed Deviation quantities.	• Allocated to RT Balancing Groups (i.e. Santa Clara and NCPA Pool) based on their respective Net Negative Uninstructed Deviation quantities • Pool Member allocation basis is City Measured Demand • Settlement granularity is hourly. • Charge Code effective as of 6/1/2021

Appendix B Section	Change Action	Description
Retirement of various CAISO Settlement Charge Codes Pages 198 -226 of redlined version of Appendix B	Remove the following retired settlement charge codes from Appendix B: CC 1101 Black Start Capacity Allocation CC 0711 – PIRP Neg Deviation CC 0721 - PIRP Monthly Netting CC 0722 – PIRP Net Deviation Reversal CC 0751 - PIRP Export NNUD Settlement CC 0752 – PIRP Export NNUD Allocation CC 6457 – Import Deviation	With the exception of Charge Code 6457, these retired charge codes cover different effective end dates and are no longer included in any of the CAISO settlement production cycles. The term "PIRP" refers to CAISO's Participating Intermittent Resource Program. Charge Code 6457 will remain in Appendix B as an active, yet retired, charge code, as it will continue to be included in subsequent published, recalculated CAISO settlement statements for prior period trade dates.

FISCAL IMPACT:

No significant costs will be incurred to implement the changes to the SCPA Appendices and funds are available in the NCPA budget to support the work associated with these contract updates.

CAISO Revenues and Costs allocated to Members are reflected in their respective share of allocated CAISO amounts that are included in the monthly All Resources Bill (ARB) and as well as, where applicable, in the NCPA annual budget for forecasted CAISO amounts.

ENVIRONMENTAL ANALYSIS:

This activity would not result in a direct or reasonably foreseeable indirect change in the physical environment and is therefore, not a "project" for purposes of Section 21065 the California Environmental Quality Act. No environmental review is necessary.

COMMITTEE REVIEW:

On August, 4, 2021 the Facilities Committee, reviewed and endorsed the recommendation above for Commission approval.

Respectfully submitted,

RANDY S. HOWARD
General Manager

Attachments:
- Resolution 21-84

SR: 210:21

RESOLUTION 21-84

RESOLUTION OF THE NORTHERN CALIFORNIA POWER AGENCY SCHEDULING COORDINATION PROGRAM AGREEMENT VERSION 24 APPENDIX B REVISION

(reference Staff Report #210:21)

WHEREAS, the Amended and Restated Scheduling Coordination Program Agreement ("SCPA") dated October 1, 2014, sets forth the terms and conditions under which NCPA supplies Scheduling Coordination Services to members; and

WHEREAS, the SCPA contains multiple appendices that detail the protocols and procedures through which NCPA participates in the California Independent System Operator ("CAISO") markets through the CAISO's bid-to-bill process cycle that includes, among other things, the submission of energy, ancillary services and capacity bids into the CAISO, and the resulting scheduling, dispatch and allocation of financial settlements associated with members' loads and supply resources; and

WHEREAS, the appendices of the SCPA contain the terms and conditions for allocating the numerous CAISO charges and credits to the members in an equitable manner, the scheduling details applicable to the agreement, and various other technical and administrative provisions; and

WHEREAS, as required from time to time the SCPA participants recommend revision and updates to the administrative and technical provisions contained in Appendix B to the SCPA to accurately reflect the evolving terms and conditions related to services from the CAISO; and

WHEREAS, to ensure the accuracy of cost allocations it is necessary to make changes and updates to the estimate and allocation formulas in Appendix B as outlined in the Appendix B Change Summary Table of the Staff Report; and

WHEREAS, on August 4, 2021 the Facilities Committee reviewed the proposed changes to Version 24 of Appendix B to the SCPA and recommended Commission approval; and

WHEREAS, this activity would not result in a direct or reasonably foreseeable indirect change in the physical environment and is therefore not a "project" for purposes of Section 21065 the California Environmental Quality Act. No environmental review is necessary; and

NOW, THEREFORE BE IT RESOLVED, that the Commission of the Northern California Power Agency acting by and through the Parties to the NCPA Scheduling Coordination Program Agreement approves revised Version 24 of Appendix B to the SCPA effective immediately as to the applicable operating dates indicated in the Appendix B Change Summary Table of the Staff Report and authorizes NCPA staff under the direction of the NCPA General Manager to implement the provisions thereto.

PASSED, ADOPTED and APPROVED this ____ day of _____, 2021, by the following vote on roll call:

	Vote	Abstained	Absent
Alameda			
San Francisco BART			
Biggs			
Gridley			
Healdsburg			
Lodi			
Lompoc			
Palo Alto			
Port of Oakland			
Redding			
Roseville			
Santa Clara			
Shasta Lake			
Truckee Donner			
Ukiah			
Plumas-Sierra			

DAVID HAGELE
CHAIR

ATTEST: CARY A. PADGETT
ASSISTANT SECRETARY

21

Commission Staff Report

March 25, 2020

COMMISSION MEETING DATE: March 26, 2020

SUBJECT: Proclaiming the Existence of a Local Emergency Concerning the COVID-19 Virus, Authorizing the General Manager as the Director of Emergency Services to Coordinate Planning, Preparedness and Response Efforts Regarding COVID-19

AGENDA CATEGORY: Discussion/Action

FROM:	Randy S. Howard	**METHOD OF SELECTION:**
	General Manager	*N/A*
Division:	Executive Services	*If other, please describe:*
Department:	General Manager	

IMPACTED MEMBERS:

All Members	☒	City of Lodi	☐	City of Shasta Lake	☐
Alameda Municipal Power	☐	City of Lompoc	☐	City of Ukiah	☐
San Francisco Bay Area Rapid Transit	☐	City of Palo Alto	☐	Plumas-Sierra REC	☐
City of Biggs	☐	City of Redding	☐	Port of Oakland	☐
City of Gridley	☐	City of Roseville	☐	Truckee Donner PUD	☐
City of Healdsburg	☐	City of Santa Clara	☐	Other	☐
		If other, please specify			

SR: 140:20

RECOMMENDATION:

Staff recommends the Northern California Power Agency (Agency) Commission adopt Resolution 20-30. Resolution 20-30 contains all of the following Commission actions to respond to the COVID-19 pandemic:

1. Recognizes the personal sacrifices and dedication of the Agency's employees who continue working to provide vital, essential electric service to the Agency's Members and customers during this global pandemic.

2. Declares that a State of Emergency exists in respect to COVID-19.

3. Authorizes during the existence of said State of Emergency, the General Manager to: 1) exercise the powers, functions and authority as the Director of Emergency Services including those prescribed by state law or by resolution of the Agency, and 2) take all other necessary actions to comply with existing and future emergency enacted federal legislation, executive orders, emergency enacted state legislation, directives of public health officials and similar laws, orders or directives so that the General Manager is hereby empowered to respond effectively to COVID-19.

4. Authorizes the General Manager to enter into such agreements with third persons as may be necessary to restore, repair, or maintain the essential electric services provided by the Agency.

5. Waives the provisions of NCPA Commission Resolution No. 13-79, limiting the purchasing authority of the General Manager to $250,000 and increases that authority to 4 times the delegated authority, with respect to those purchases of goods and services necessary or required by the Agency during this State of Emergency.

6. Directs the General Manager to weekly, or more frequently as needed, following the approval of resolution through email or during a conference call of the Commission, provide updates, including but not limited to simultaneous updates: of 1) actions taken pursuant to the authority granted by this declaration of a State of Emergency, and 2) information relevant to the declared State of Emergency (including but not limited to, local government responses to COVID-19, and other aspects relevant to the declared emergency) from local, state and federal government officials, in order for Members of the Commission to stay apprised of emergency operations and the impact of the emergency within the Agency.

7. Declares that the public interest and necessity demand the immediate expenditure of public money to safeguard life, health, and/or property and finds, based on substantial evidence, that the emergency will not permit a delay resulting from competitive solicitation for bids, and that this action is necessary to respond to the emergency. Based thereon, it is delegated to the General Manager the authority to take such action as may be necessary regarding the repair of replacement of a public facility, including procuring the necessary equipment, services, and supplies without engaging in a competitive bid process.

8. Asserts pursuant to Government Code Section 3100 that all public employees are hereby declared to be disaster service workers (Essential Critical Infrastructure Workers)

subject to such disaster service activities as may be assigned to them by their superiors or by law.

9. Affirms pursuant to Executive Order, N-35-20, issued by Governor Gavin Newsom, and the Circular Letter from the California Public Employees' Retirement System (CalPERS), the work hour limitations for retired annuitants is suspended from the date of state of emergency was declared until the State of Emergency is lifted. Under the executive order, the 180-day break in service requirement under Government Code section 7522.56(f) is suspended for retired annuitants hired to ensure adequate staffing during the State of Emergency.

10. Authorizes the General Manager as needed to coordinate with the IBEW 1245, the Hydroelectric Employee Association and non-represented Agency staff to adjust work hours, work days, create temporary camps or lodging to isolate employees from the general population, expand the number of Agency employees or take any other action necessary to retain, restore, and maintain Agency operations to ensure the Agency can continue to provide essential electric service, and further and only if needed, direct Agency employees both represented and non-represented to report as Disaster Service Workers pursuant to California Government Code Section 3100 *et. seq.*

11. Declares the emergency declaration shall remain in effect until the California Proclamation of a State of Emergency is lifted.

BACKGROUND:

On January 30, 2020, the World Health Organization declared the COVID-19 outbreak to be a "public health emergency of international concern." On March 4, 2020, the Governor of California proclaimed a State of Emergency in the State of California. COVID-19 was declared a pandemic by the World Health Organization on March 11, 2020, and the Governor of California issued a new Executive Order further enhancing state and local government's ability to respond to the COVID-19 pandemic. On March 13, 2020, the President of the United States declared a state of national emergency in response to the COVID-19 outbreak.

Placer County reported community transmission of COVID-19, with multiple cases of confirmed patients, and there is an ongoing risk and likelihood of additional COVID-19 positive patients being identified in the county. There is currently no vaccine or medical treatment specifically for COVID-19, which is pandemic that is potentially beyond the control of the services, personnel, equipment, and facilities of the Agency. The health, safety, and welfare of the employees of the Agency are of the utmost importance. On March 19, 2020, the Placer County Health and Human Services Public Health department issued a shelter in place directive to their residence and restricted non-essential activities in response to COVID-19 pandemic, and many other counties in which NCPA has facilities and where our employees live have issued similar conditions. Finally, also on March 19, 2020, California Governor Gavin Newsom issued Executive Order N-33-20 ordering all individuals living in the state of California to stay home or at their place of residence except as needed to maintain continuity of operations of the federal critical infrastructure sectors.

The Department of Homeland Security has identified the energy sector as one of 16 critical infrastructure sectors that are considered so vital to the United States that their incapacitation or destruction would have debilitating effects on security, national economic security and national

public health and safety. In addition Executive Order N-33-20 specified energy sector workers as essential critical infrastructure workers exempted from his directive to stay home or at their place of residence. Thus, the functions of the Agency including but not limited to its work to continue to operate, maintain and restore to operation its electric generation facilities including the contracting for and payment of third parties for services; the planning, scheduling and dispatch of electric energy to support Agency Member and customer loads; the prompt payment of bills including the calculation and payment of energy settlements as required by the California Independent System Operator and for bilateral transactions; and its work to inform and educate policy makers of the impacts of proposed emergency legislation and provide up to date information to the Agency and our Members of the obligations included in the emergency legislation are critical to maintain the Agency's ability to provide essential electric service to our Members and customers. The Agency's employees providing these vital services must continue to work either in their residence or at the Agency's offices, dispatch locations and power generation facilities.

FISCAL IMPACT:

The fiscal impact has yet to be determined.

ENVIRONMENTAL ANALYSIS:

The impacts from COVID-19 are new and the requirements adopted by federal and state entities, and public health officials create an ever evolving situation. As the need arises, the Agency may be availing itself of emergency exemptions from the California Environmental Quality Act as the Agency needs to take actions that qualify for these exemptions. California Public Resources Code Section 21080(b) (2), (3) & (4) and Title 14, California Code of Regulations Section 15269 provide exemptions from review under the California Environmental Quality Act for projects undertaken, carried out, or approved by a public agency to maintain, repair, restore demolish, or replace property or facilities damaged or destroyed as a result of a disaster, or complete emergency repairs to maintain service essential to the public health, safety or welfare, in which a state of emergency has been proclaimed by the Governor pursuant to the California Emergency Services Act (Cal. Gov. Code §§ 8550) or to take specific actions necessary to prevent or mitigate an emergency.

COMMITTEE REVIEW:

The recommendation will be reviewed by the Executive Committee on March 26, 2020, and is being considered for Commission approval.

Respectfully submitted,

RANDY S. HOWARD
General Manager

Attachments:
- Resolution 20-30

SR: 140:20

RESOLUTION 20-30

RESOLUTION OF THE NORTHERN CALIFORNIA POWER AGENCY PROCLAIMING THE EXISTENCE OF A LOCAL EMERGENCY CONCERNING THE COVID-19 VIRUS, AUTHORIZING THE GENERAL MANAGER AS THE DIRECTOR OF EMERGENCY SERVICES TO COORDINATE PLANNING, PREPAREDNESS AND RESPONSE EFFORTS REGARDING COVID-19

(reference Staff Report #140:20)

WHEREAS, the Commission of the Northern California Power Agency met on March 26, 2020, during its regular scheduled meeting; and

WHEREAS, on January 30, 2020, the World Health Organization declared the COVID-19 outbreak to be a public health emergency of international concern; and

WHEREAS, on January 31, 2020; the United States of America, Department of Health and Human Services declared a Public Health Emergency for the United States of America; and

WHEREAS, on March 4, 2020, California Governor Gavin Newson declared a State of Emergency in the State of California due to the number of confirmed cases of COVID-19 in the State; and

WHEREAS, on March 11, 2020, the World Health Organization made the assessment that COVID-19 can be characterized as a pandemic; and

WHEREAS, on March 13, 2020, the President of the United States declared a state of national emergency in response to the COVID-19 outbreak; and

WHEREAS, on March 19, 2020, Placer County issued a Directive of Placer County Health Officer instructing individuals to shelter in place of residence and restricting non-essential activities in response to COVID-19 outbreak; and

WHEREAS, the World Health Organization reported COVID-19 is easily transmissible from person to person and has spread globally to over 198 countries, infected more than 374,714, and killing more than 16,350 individuals as of March 23, 2020; and

WHEREAS, conditions of extreme peril to the safety of person and property have arisen and are threatening health and safety within the Agency's jurisdiction resulting from the COVID-19 virus pandemic; and

WHEREAS, the threat of exposure to, and the spread of COVID-19, cannot be quarantined to one defined geographical area, and thus is likely to require the combined forces of multiple political subdivisions of the state to combat; and

WHEREAS, the Department of Homeland Security has identified the energy sector as one of the 16 critical infrastructure sectors that are considered so vital to the United States that their incapacitation or destruction would have debilitating effects on security, national economic security and national public health and safety; and

WHEREAS, California Governor Gavin Newson in association with Executive Order N-33-20 specified energy sector workers as essential critical infrastructure workers and as an exception to his directive to stay home or at their place of residence; and

WHEREAS, the federal government as enacted emergency measures addressing COVID-19 including the Families First Coronavirus Response Act and the Coronavirus Aid, Relief, and Economic Security Act, and may take further action; and

WHEREAS, California Governor Gavin Newsom has issued multiple executive orders addressing COVID-19 and may issue additional executive orders; and

WHEREAS, California Public Resources Code Section 21080(b) (2), (3) & (4) and Title 14, California Code of Regulations Section 15269 provide exemptions from review under the California Environmental Quality Act for projects undertaken, carried out, or approved by a public agency to maintain, repair, restore demolish, or replace property or facilities damaged or destroyed as a result of a disaster, or complete emergency repairs to maintain service essential to the public health, safety or welfare, in which a state of emergency has been proclaimed by the Governor pursuant to the California Emergency Services Act (Cal. Gov. Code §§ 8550) or to take specific actions necessary to prevent or mitigate an emergency; and

NOW, THEREFORE BE IT RESOLVED, that the Commission of the Northern California Power Agency:

1. Recognizes the personal sacrifices and dedication of the Agency's employees who continue working to provide vital, essential electric service to the Agency's Members and customers during this global pandemic.

2. Finds the recitals stated above are true, correct and are adopted herein as findings.

3. Declares that a State of Emergency exists in respect to COVID-19.

4. Authorizes during the existence of said State of Emergency, the General Manager to: 1) exercise the powers, functions and authority as the Director of Emergency Services including those prescribed by state law or, by resolution of the Agency, and 2) take all other necessary actions to comply with existing and future emergency enacted federal legislation, executive orders, emergency enacted state legislation, directives of public health officials and similar laws, orders or directives so that the General Manager is hereby empowered to respond effectively to COVID-19.

5. Authorizes the General Manager to enter into such agreements with third persons as may be necessary to restore, repair, or maintain the essential electric services provided by the Agency.

6. Waives the provisions of NCPA Commission Resolution No. 13-79, limiting the purchasing authority of the General Manager to $250,000 and increases that authority to 4 times the delegated authority, with respect to those purchases of goods and services necessary or required by the Agency during this State of Emergency.

7. Directs the General Manager to weekly, or more frequently as needed, following the approval of the resolution through email or during a conference call of the Commission, provide updates, including but not limited to simultaneous updates, of 1) actions taken pursuant to the authority granted by this declaration of a State of Emergency, and 2) information relevant to the declared State of Emergency (including but not limited to, local government responses to COVID-19, and other aspects relevant to the declared emergency) from local, state and federal government officials, in order for Members of the Commission to stay apprised of emergency operations and the impact of the emergency within the Agency.

8. Declares that the public interest and necessity demand the immediate expenditure of public money to safeguard life, health, and/or property and finds, based on substantial evidence, that the emergency will not permit a delay resulting from competitive solicitation for bids, and that this action is necessary to respond to the emergency. Based thereon, it is delegated to the General Manager the authority to take such action as may be necessary regarding the repair of replacement of a

public facility, including procuring the necessary equipment, services, and supplies without engaging in a competitive bid process.

9. Asserts pursuant to Government Code Section 3100 that all public employees are hereby declared to be disaster service workers (Essential Critical Infrastructure Workers) subject to such disaster service activities as may be assigned to them by their superiors or by law.

10. Affirms pursuant to Executive Order, N-35-20, issued by Governor Gavin Newsom, and the Circular Letter from the California Public Employees' Retirement System (CalPERS), the work hour limitations for retired annuitants is suspended from the date of State of Emergency was declared until the state of emergency is lifted. Under the executive order, the 180-day break in service requirement under Government Code section 7522.56(f) is suspended for retired annuitants hired to ensure adequate staffing during the State of Emergency.

11. Authorizes the General Manager as needed to coordinate with the IBEW 1245, the Hydroelectric Employee Association and non-represented Agency staff to adjust work hours, work days, create temporary camps or lodging to isolate employees from the general population, expand the number of Agency employees or take any other action necessary to retain, restore, and maintain Agency operations to ensure the Agency can continue to provide essential electric service, and further and only if needed, direct Agency employees both represented and non-represented to report as Disaster Service Workers pursuant to California Government Code Section 3100 *et. seq.*

12. Declares the emergency declaration shall remain in effect until the California Proclamation of a State of Emergency is lifted.

PASSED, ADOPTED and APPROVED this 26 day of March, 2020, by the following vote on roll call:

	Vote	Abstained	Absent
Alameda	Y		
San Francisco BART			X
Biggs	Y		
Gridley	Y		
Healdsburg	Y		
Lodi	Y		
Lompoc	Y		
Palo Alto	Y		
Port of Oakland	Y		
Redding	Y		
Roseville	Y		
Santa Clara	Y		
Shasta Lake	Y		
Truckee Donner			X
Ukiah	Y		
Plumas-Sierra	Y		

ROGER FRITH
CHAIR

ATTEST: CARY A. RADGETT
ASSISTANT SECRETARY

22

Commission Staff Report

COMMISSION MEETING DATE: August 26, 2021

SUBJECT: Amendment to Resolution 16-89 for the Geothermal Sulfur Product Sale, Per Updated Classification Standards; Applicable to the following: NCPA Geothermal Facility.

AGENDA CATEGORY: Discussion/Action

FROM:	Ledesma, Joel Assistant General Manager	**METHOD OF SELECTION:** *N/A*
Division:	Generation Services	*If other, please describe:*
Department:	Geothermal	

IMPACTED MEMBERS:

All Members	☐	**City of Lodi**	☒	**City of Shasta Lake**	☐
Alameda Municipal Power	☒	**City of Lompoc**	☒	**City of Ukiah**	☒
San Francisco Bay Area Rapid Transit	☐	**City of Palo Alto**	☐	**Plumas-Sierra REC**	☒
City of Biggs	☒	**City of Redding**	☐	**Port of Oakland**	☐
City of Gridley	☒	**City of Roseville**	☒	**Truckee Donner PUD**	☐
City of Healdsburg	☒	**City of Santa Clara**	☒	**Other**	☒
		If other, please specify		Turlock	

RECOMMENDATION:

Approval of Amendment to Resolution 16-89 authorizing re-classification standards of sulfur levels for the Geothermal Plant Facility, delegating authority to the General Manager or his designee to sell non-hazardous sulfur product as a soil amendment, increasing the threshold of allowable vanadium content in the sulfur cakes produced at NCPA's Geothermal facility from the current threshold limit of 10 mg/L or 100 mg/kg to a new threshold limit of 22mg/L or 220 mg/kg, to align with current industry standards.

BACKGROUND:

NCPA's Geothermal Facility produces a dry sulfur cake as a secondary product associated with Geothermal Stretford operations. This high purity sulfur has trace contents of vanadium and mercury, along with other natural occurring trace elements. NCPA analyzes every 20 yard roll off bin of the sulfur cake it produces. This cake is then classified as either hazardous or non-hazardous. Over the last two decades, the majority of the sulfur produced in the Geysers (NCPA & Calpine) was sold as a soil amendment, for pH adjustment for agriculture.

A study conducted in 2016 by Black and Veatch (B&V) determined that the sale of non-hazardous sulfur for use as a soil amendment was an acceptable and beneficial use of that material. In addition, the report stated that the sale of the sulfur did not create excessive risk to NCPA. Black and Veatch also determined that the analysis data of the sulfur to be shipped by NCPA for soil amendment was far below the state and US waste criteria for mercury and vanadium. Additionally, the consultant found that NCPA had significant long-term analysis data showing limited variation in concentration over time. Thus, the sulfur to be sold as a soil amendment will be analyzed and determined to have levels, if any, of mercury and vanadium that are below state and federal standards for hazardous wastes. Any material with limits above these will be properly disposed of in a hazardous waste landfill. Thus, NCPA's Commission approved the Geothermal Sulfur Product Sale at the December 1, 2016 Commission Meeting (SR: 225:16; Reso: 16-89), with the vanadium threshold limit of 10 mg/L or 100 mg/kg.

NCPA staff have reviewed historical data back to 2017 to confirm B&V's determination on mercury and vanadium concentration variations and have validated B&V's assessment that it is fairly consistent in levels or limited variation. In addition, the testing methodology has been in place over 5 years and has proven to work in a consistent and effective way. As a result, staff believe the thresholds of allowable vanadium limits can be increased to a new threshold limit of 22mg/L or 220 mg/kg, to align with current industry standards, with a risk reduction to the agency as a result of less hazardous classified vanadium bin shipment to a hazardous site.

FISCAL IMPACT:

Upon approval of this resolution, the sale of sulfur cakes produced at the Geothermal Facility will bring in additional revenue of approximately $2,000/year. The total cost for removal of hazardous waste will decline by approximately $25,000/year. Funds for removal of hazardous waste are included in the yearly approved GEO O&M budget.

SELECTION PROCESS:

NCPA is currently under contract with HB Soil Solution, Inc for the purchase of the geothermal sulfur cake.

ENVIRONMENTAL ANALYSIS:

This activity would not result in a direct or reasonably foreseeable indirect change in the physical environment and is therefore not a "project" for purposes of Section 21065 the California Environmental Quality Act. No environmental review is necessary.

COMMITTEE REVIEW:

On August 4, 2021, the Facilities Committee reviewed and endorsed the recommendation above for Commission approval.

Respectfully submitted,

RANDY S. HOWARD
General Manager

Attachments:

- Amendment to Resolution 16-89

SR: 201:21

AMENDMENT TO APPROVED RESO #16-89

RESOLUTION OF THE NORTHERN CALIFORNIA POWER AGENCY APPROVING THE AMENDMENT TO GEOTHERMAL SULFUR PRODUCT SALE, PER UPDATED CLASSIFICATION STANDARDS RESOLUTION

(reference Staff Report #201:21)

WHEREAS, the Northern California Power Agency (NCPA) operates and maintains on behalf of the project owners a Geothermal facility near Middletown, CA, consisting of two power plants; and

WHEREAS, as a by-product of the Geothermal operations, 99% pure sulfur is produced into cakes which are stored in bins that are shipped off site; and

WHEREAS, a study conducted in 2016 by Black and Veatch determined that the sale of non-hazardous sulfur for use as a soil amendment was an acceptable and beneficial use of that material; and

WHEREAS, the Geothermal Sulfur Product Sale was approved by the Commission at the December 1, 2016, Commission Meeting (SR 225:16; Reso: 16-89), with the vanadium threshold limit of 10 mg/L or 100 mg/kg; and

WHEREAS, NCPA is now requesting approval to increase the threshold of allowable vanadium content in the sulfur cakes produced at NCPA's Geothermal facility from the current threshold limit of 10 mg/L or 100 mg/kg to a new threshold limit of 22mg/L or 220 mg/kg, to align with current industry standards; and

WHEREAS, this activity would not result in a direct or reasonably foreseeable indirect change in the physical environment and is therefore not a "project" for purposes of Section 21065 the California Environmental Quality Act. No environmental review is necessary. NCPA believes that the use of the non-hazardous sulfur product for agricultural purposes is an acceptable and beneficial use of the material; and

NOW, THEREFORE BE IT RESOLVED, that the Commission of the Northern California Power Agency authorizes the re-classification standards of sulfur levels for the Geothermal Plant Facility, delegating authority to the General Manager or his designee to sell non-hazardous sulfur product as a soil amendment, increasing the threshold of allowable vanadium content in the sulfur cakes produced at NCPA's Geothermal facility from the current threshold limit of 10 mg/L or 100 mg/kg to a new threshold limit of 22mg/L or 220 mg/kg, to align with current industry standards.

PASSED, ADOPTED and APPROVED this ____ day of _____, 2021, by the following vote on roll call:

	Vote	Abstained	Absent
Alameda			
San Francisco BART			
Biggs			
Gridley			
Healdsburg			
Lodi			
Lompoc			
Palo Alto			
Port of Oakland			
Redding			
Roseville			
Santa Clara			
Shasta Lake			
Truckee Donner			
Ukiah			
Plumas-Sierra			

_____
DAVID HAGELE
CHAIR

ATTEST:

_____
CARY A. PADGETT
ASSISTANT SECRETARY

23

A PUBLIC AGENCY
NCPA
NORTHERN CALIFORNIA POWER AGENCY

Commission Staff Report

COMMISSION MEETING DATE: August 26, 2021

SUBJECT: Approval of the Power Purchase Agreement between South Feather Water and Power Agency and Northern California Power Agency and the Third Phase Agreement for Power Purchase Agreement with South Feather Water and Power Agency

AGENDA CATEGORY: Discussion/Action

FROM:	Tony Zimmer	**METHOD OF SELECTION:**
	Assistant General Manager	*N/A*
Division:	Power Management	*If other, please describe:*
Department:	Power Management	

IMPACTED MEMBERS:

All Members	☐	**City of Lodi**	☒	**City of Shasta Lake**	☐
Alameda Municipal Power	☐	**City of Lompoc**	☒	**City of Ukiah**	☒
San Francisco Bay Area Rapid Transit	☒	**City of Palo Alto**	☐	**Plumas-Sierra REC**	☐
City of Biggs	☐	**City of Redding**	☐	**Port of Oakland**	☒
City of Gridley	☐	**City of Roseville**	☒	**Truckee Donner PUD**	☐
City of Healdsburg	☒	**City of Santa Clara**	☒	**Other**	☐

If other, please specify

RECOMMENDATION:

Approve Resolution 21-83 authorizing the General Manager of Northern California Power Agency (NCPA) to enter into (i) the Power Purchase Agreement between South Feather Water and Power Agency (SFWPA) and Northern California Power Agency (PPA), and (ii) the Third Phase Agreement for Power Purchase Agreement with South Feather Water and Power Agency (Third Phase Agreement), including any non-substantial modifications to the Third Phase Agreement recommended and approved by the NCPA General Counsel, and any non-substantial modification to the PPA or specific modifications to the PPA related to any pending request for approval as may be filed by SFWPA with FERC, that are recommended and approved by the NCPA General Counsel.

BACKGROUND:

NCPA's Members have adopted or are adopting policies that are designed to increase the amount of energy that they provide to their retail customers from eligible renewable energy resources and carbon free resources to comply with the California Renewable Energy Resources Act and other applicable requirements. SFWPA owns and operates four existing hydroelectric generating plants operating under FERC licenses: the Forbestown Powerhouse (37.5 MW), the Kelly Ridge Powerhouse (11.0 MW), the Sly Creek Powerhouse (13.0 MW) and the Woodleaf Powerhouse (60.0 MW) (the Facility or as otherwise referred to as the South Feather Power Project) that qualify as either eligible renewable energy resources or carbon free resources.

SFWPA has agreed to sell to NCPA, and NCPA has agreed to purchase from SFWPA, certain energy, capacity rights and associated environmental attributes supplied from the South Feather Power Project pursuant to the terms and conditions set forth in the PPA.

The term of the PPA includes the Initial Delivery Term that will begin on the Initial Delivery Date, and will continue uninterrupted through December 31, 2031. At the end of the Initial Delivery Term, if SFWPA does not elect to terminate the PPA, the term of the PPA will automatically extend for an additional 10 year period (the Extended Delivery Term). During the term of the PPA, NCPA will schedule and dispatch the South Feather Power Project, and SFWPA will own, operate and maintain the South Feather Power Project.

The PPA also contains certain requirements for SFWPA to acquire all licenses necessary for performance of its obligation set forth in the PPA. SFWPA is currently seeking certain approvals from FERC to ensure it can fully satisfy such requirements. As such, NCPA staff also recommends that the Commission grant limited authority to the NCPA General Counsel to approve and incorporate additional provisions in the PPA to address any requirements that may be ordered or directed by FERC in response to SFWPA's pending request.

To enable NCPA to enter into the PPA on behalf of the Participants, pursuant to the terms and conditions of the Amended and Restated Facilities Agreement, the Third Phase Agreement provides all means necessary for NCPA to fulfill obligations incurred on behalf of NCPA and the Participants pursuant to the PPA, and to enable and obligate the Participants to take delivery of and pay for such electric capacity and energy and to pay NCPA for all costs it incurs for undertaking the foregoing activities. The Third Phase Agreement specifies the rights and obligations of NCPA and the Participants regarding governance and administration of the PPA, and obligates each Participant to pay for its Project Participation Percentage share of all Project

Costs, Administrative Services Costs, scheduling coordination costs, and all other costs related to the PPA.

Upon full execution of the Third Phase Agreement, NCPA will be authorized to enter into the PPA on behalf of the Participants, and such PPA shall be deemed a NCPA Project by the Commission pursuant to the Amended and Restated Facilities Agreement.

A copy of the PPA and the Third Phase Agreement have been attached to this staff report for reference.

FISCAL IMPACT:

SFWPA has agreed to sell to NCPA, and NCPA has agreed to purchase from SFWPA, certain energy, capacity rights and associated environmental attributes produced by the South Feather Power Project for the purchase price set forth in Appendix A of the PPA.

NCPA's costs for development and administration of the PPA and Third Phase Agreement will be allocated to Members in accordance with the Third Phase Agreement, the Power Management and Administrative Services Agreement, the Amended and Restated Facilities Agreement, and approved cost allocation methodologies as described in the NCPA annual budget.

ENVIRONMENTAL ANALYSIS:

NCPA proposes to enter into a PPA to acquire certain energy, capacity rights and environmental attributes produced by the South Feather Power Project. This activity would not result in a physical change to the existing facilities and therefore, would not result in a direct or reasonably foreseeable indirect change to the physical environment. Thus, this activity is not a "project" for purposes of Section 21065 of the California Environmental Quality Act. No environmental review is necessary.

COMMITTEE REVIEW:

On August 4, 2021, the Facilities Committee reviewed and endorsed the recommendation above for Commission approval.

Respectfully submitted,

Martin Hall for

RANDY S. HOWARD
General Manager

Attachments:
- Resolution 21-83
- Third Phase Agreement
- Power Purchase Agreement between SFWPA and NCPA

SR: 206:21

RESOLUTION 21-83

RESOLUTION OF THE NORTHERN CALIFORNIA POWER AGENCY APPROVING THE POWER PURCHASE AGREEMENT BETWEEN SOUTH FEATHER WATER AND POWER AGENCY AND NORTHERN CALIFORNIA POWER AGENCY AND THE THIRD PHASE AGREEMENT FOR POWER PURCHASE AGREEMENT WITH SOUTH FEATHER WATER AND POWER AGENCY

(reference Staff Report #206:21)

WHEREAS, Northern California Power Agency's (NCPA) Members have adopted or are adopting policies that are designed to increase the amount of energy that they provide to their retail customers from eligible renewable energy resources and carbon free resources to comply with the California Renewable Energy Resources Act and other applicable requirements; and

WHEREAS, South Feather Power and Water Agency (SFWPA) owns and operates four existing hydroelectric generating plants operating under FERC licenses: the Forbestown Powerhouse (37.5 MW), the Kelly Ridge Powerhouse (11.0 MW), the Sly Creek Powerhouse (13.0 MW) and the Woodleaf Powerhouse (60.0 MW) (the Facility or as otherwise referred to as the South Feather Power Project) that qualify as either eligible renewable energy resources or carbon free resources; and

WHEREAS, SFWPA has agreed to sell to NCPA, and NCPA has agreed to purchase from SFWPA, certain energy, capacity rights and associated environmental attributes supplied from the South Feather Power Project pursuant to the terms and conditions set forth in the PPA; and

WHEREAS, the term of the PPA includes the Initial Delivery Term that will begin on the Initial Delivery Date, and will continue uninterrupted through December 31, 2031, and at the end of the Initial Delivery Term, if SFWPA does not elect to terminate the PPA, the term of the PPA will automatically extend for an additional 10 year period (the Extended Delivery Term); and

WHEREAS, during the term of the PPA, NCPA will schedule and dispatch the South Feather Power Project, and SFWPA will own, operate and maintain the South Feather Power Project; and

WHEREAS, the PPA also contains certain requirements for SFWPA to acquire all licenses necessary for performance of its obligation set forth in the PPA, and SFWPA is currently seeking certain approvals from FERC to ensure it can fully satisfy such requirements; and

WHERAS, to enable NCPA to enter into the PPA on behalf of the Participants, pursuant to the terms and conditions of the Amended and Restated Facilities Agreement, the Third Phase Agreement provides all means necessary for NCPA to fulfill obligations incurred on behalf of NCPA and the Participants pursuant to the PPA, and to enable and obligate the Participants to take delivery of and pay for such electric capacity and energy and to pay NCPA for all costs it incurs for undertaking the foregoing activities; and

WHEREAS, the Third Phase Agreement specifies the rights and obligations of NCPA and the Participants regarding governance and administration of the PPA, and obligates each Participant to pay for its Project Participation Percentage share of all Project Costs, Administrative Services Costs, scheduling coordination costs, and all other costs related to the PPA; and

WHEREAS, upon full execution of the Third Phase Agreement, NCPA will be authorized to enter into the PPA on behalf of the Participants, and such PPA shall be deemed a NCPA Project by the Commission pursuant to the Amended and Restated Facilities Agreement; and

WHEREAS, SFWPA has agreed to sell to NCPA, and NCPA has agreed to purchase from SFWPA, certain energy, capacity rights and associated environmental attributes produced by the South Feather Power Project for the purchase price set forth in Appendix A of the PPA; and

WHEREAS, NCPA's costs for development and administration of the PPA and Third Phase Agreement will be allocated to Members in accordance with the Third Phase Agreement, the Power Management and Administrative Services Agreement, the Amended and Restated Facilities Agreement, and approved cost allocation methodologies as described in the NCPA annual budget; and

WHEREAS, NCPA proposes to enter into a PPA to acquire certain energy, capacity rights and environmental attributes produced by the South Feather Power Project. This activity would not result in a physical change to the existing facilities and therefore, would not result in a direct or reasonably foreseeable indirect change to the physical environment. Thus, this activity is not a "project" for purposes of Section 21065 of the California Environmental Quality Act. No environmental review is necessary; and

NOW, THEREFORE BE IT RESOLVED, that the Commission of the Northern California Power Agency adopts Resolution 21-83 authorizing the General Manager of Northern California Power Agency to enter into (i) the Power Purchase Agreement between South Feather Water and Power Agency and Northern California Power Agency (PPA), and (ii) the Third Phase Agreement for Power Purchase Agreement with South Feather Water and Power Agency (Third Phase Agreement), including any non-substantial modifications to the Third Phase Agreement recommended and approved by the NCPA General Counsel, and any non-substantial modification to the PPA or specific modifications to the PPA related to any pending request for approval as may be filed by SFWPA with FERC, that are recommended and approved by the NCPA General Counsel.

PASSED, ADOPTED and APPROVED this ____ day of _____, 2021, by the following vote on roll call:

	Vote	Abstained	Absent
Alameda			
San Francisco BART			
Biggs			
Gridley			
Healdsburg			
Lodi			
Lompoc			
Palo Alto			
Port of Oakland			
Redding			
Roseville			
Santa Clara			
Shasta Lake			
Truckee Donner			
Ukiah			
Plumas-Sierra			

_____
DAVID HAGELE
CHAIR

ATTEST:

_____
CARY A. PADGETT
ASSISTANT SECRETARY

THIRD PHASE AGREEMENT

FOR

POWER PURCHASE AGREEMENT

WITH

SOUTH FEATHER WATER AND POWER AGENCY

TABLE OF CONTENTS

Section 1. Definitions. 3

Section 2. Purpose 11

Section 3. Sale and Purchase of Product 11

Section 4. Billing and Payments 12

Section 5. Security Deposit Administration 15

Section 6. Cooperation and Further Assurances 20

Section 7. Participant Covenants and Defaults 20

Section 8. Administration of Agreement 24

Section 9. Transfer of Rights by Participants 25

Section 10. Term and Termination 26

Section 11. Withdrawal of Participants 26

Section 12. Settlement of Disputes and Arbitration 26

Section 13. Miscellaneous 27

EXHIBIT A. Project Participation Percenages 38

EXHIBIT B. PPA 41

This THIRD PHASE AGREEMENT ("this Agreement") is dated as of _____, 20__ by and among the Northern California Power Agency, a joint powers agency of the State of California ("NCPA"), and the signatories to this Agreement other than NCPA ("Participants"). NCPA and the Participants are referred to herein individually as a "Party" and collectively as the "Parties".

RECITALS

A. NCPA has heretofore been duly established as a public agency pursuant to the Joint Exercise of Powers Act of the Government Code of the State of California and, among other things, is authorized to acquire, construct, finance, and operate buildings, works, facilities, and improvements for the generation and transmission of electric capacity and energy for resale.

B. Each of the Participants is a signatory to the Joint Powers Agreement which created NCPA and therefore is a Member.

C. Each of the Participants to this Agreement have executed the Amended and Restated Facilities Agreement, dated October 1, 2014, which establishes the framework under which Project Agreements are created for the development, design, financing, construction, and operation of specific NCPA Projects.

D. The Participants desire NCPA to enter into a Power Purchase Agreement ("PPA") with South Feather Water and Power Agency ("SFWPA" or "Seller"), to purchase

electric capacity and energy produced by the Project for the benefit of the Participants' customers.

E. Each Participant is authorized by its Constitutive Documents to obtain electric capacity and energy for its present or future requirements, through contracts with NCPA or otherwise.

F. To enable NCPA to enter into the PPA on behalf of the Participants, pursuant to the terms and conditions of the Amended and Restated Facilities Agreement, NCPA and the Participants wish to enter into this Agreement to provide all means necessary for NCPA to fulfill obligations incurred on behalf of NCPA and the Participants pursuant to the PPA, and to enable and obligate the Participants to take delivery of and pay for such electric capacity and energy and to pay NCPA for all costs it incurs for undertaking the foregoing activities.

G. Upon full execution of this Agreement, NCPA will enter into the PPA on behalf of the Participants, and such PPA shall be deemed a NCPA Project by the Commission.

H. Each of the Parties intends to observe the provisions of this Agreement in good faith and shall cooperate with all other Parties in order to achieve the full benefits of joint action.

I. The Parties desire to equitably allocate costs of NCPA's provision of services under this Agreement among the Participants.

J. The Participants further desire, insofar as possible, to insulate other Members who are not Participants, from risks inherent in the services and transactions undertaken on behalf of the Participants pursuant to this Agreement.

NOW, THEREFORE, the Parties agree as follows:

Section 1. Definitions.

1.1 Definitions. Whenever used in this Agreement (including the Recitals hereto), the following terms shall have the following respective meanings, provided, capitalized terms used in this Agreement (including the Recitals hereto) that are not defined in Section 1 of this Agreement shall have the meaning indicated in Section 1 of the Power Management and Administrative Services Agreement, dated October 1, 2014:

1.1.1 "Administrative Services Costs" means that portion of the NCPA administrative, general and occupancy costs and expenses, including those costs and expenses associated with the operations, direction and supervision of the general affairs and activities of NCPA, general management, treasury operations, accounting, budgeting, payroll, human resources, information technology, facilities management, salaries and wages (including retirement benefits) of employees, facility operation and maintenance costs, taxes and payments in lieu of taxes (if any), insurance premiums, fees for legal, engineering, financial and other services, power management services, general settlement and billing services and general risk management costs, that are charged directly or apportioned to the provision of services under this Agreement.

Administrative Services Costs as separately defined herein and used in the context of this Agreement is different and distinct from the term Administrative Services Costs as defined in Section 1 of the Power Management and Administrative Services Agreement.

1.1.2 "Agreement" means this Third Phase Agreement, including all Exhibits attached hereto.

1.1.3 "CAISO" means the California Independent System Operator Corporation, or its functional successor.

1.1.4 "CAISO Tariff" means the duly authorized tariff, rules, protocols and other requirements of the ISO, as amended from time to time.

1.1.5 "Capacity Attributes" means any and all current or future defined characteristics consistent with the operational limitations of the Project, certificates, tags, credits, ancillary service attributes, or accounting constructs, howsoever entitled, including Resource Adequacy Benefits, Flexible Capacity Benefits, and any tracking or accounting associated with the foregoing, intended to value any aspect of the capacity of the Project to produce Energy or ancillary services, attributed to or associated with the Project.

1.1.6 "Constitutive Documents" means, with respect to NCPA, the Joint Powers Agreement and any resolutions or bylaws adopted thereunder with respect to the governance of NCPA, and with respect to each Participant, the California

Government Code and other statutory provisions applicable to such Participant, any applicable agreements, charters, contracts, or other documents concerning the formation, operation or decision making of such Participant, including, if applicable, its city charter, and any codes, ordinances, bylaws, and resolutions adopted by such Participant's governing body.

1.1.7 "Defaulting Participant" has the meaning set forth in Section 7.2.

1.1.8 "Energy" means electric energy expressed in units of kWh or MWh.

1.1.9 "Environmental Attributes" means any and all credits, benefits, emissions reductions, offsets, and allowances, howsoever entitled, attributable to the generation from the Project, as the case may be, and its displacement of conventional energy generation. Environmental Attributes include: (i) any avoided emissions of pollutants to the air, soil or water such as sulfur oxides (SOx), nitrogen oxides (NOx), carbon monoxide (CO) and other pollutants; (ii) any avoided emissions of carbon dioxide (CO2), methane (CH4) and other greenhouse gases that have been determined by the United Nations Intergovernmental Panel on Climate Change to contribute to the actual or potential threat of altering the Earth's climate by trapping heat in the atmosphere; and (iii) the reporting rights to these avoided emissions such as, but not limited to, a REC.

Environmental Attributes do not include: (i) any Energy, capacity, reliability, or other power attributes from the Project; (ii) production tax credits associated with the construction or operation of the Project, and other financial incentives in the form of credits, reductions, or allowances associated with the Project that are applicable to a state or federal income taxation obligation (iii) fuel-related subsidies or "tipping fees" that may be paid to Seller to accept certain fuels, or local subsidies received by Seller or the owners of the site for the destruction of particular pre-existing pollutants or the promotion of local environmental benefits; or (iv) emission reduction credits encumbered or used by the Project for compliance with local, state, or federal operating and/or air quality permits.

1.1.10 "Event of Default" has the meaning set forth in Section 7.2.

1.1.11 "Flexible Capacity" has the meaning set forth in the CAISO Tariff.

1.1.12 "Flexible Capacity Benefits" means the rights and privileges attached to any generating resource that satisfy any entity's Flexible Capacity requirement.

1.1.13 "General Operating Reserve" means the NCPA General Operating Reserve created through resolution of the Commission, as the same may be amended from time to time.

1.1.14 "KWh" means kilowatt hour.

1.1.15 "MW" means megawatt.

1.1.16 "MWh" means megawatt hour.

1.1.17 "NCPA" has the meaning set forth in the recitals hereto.

1.1.18 "Participant" has the meaning set forth in the recitals of this Agreement.

1.1.19 "Power Management and Administrative Services Agreement" means the NCPA Power Management and Administrative Services Agreement, dated as of October 1, 2014 between NCPA and the Members who are signatories to that agreement by which NCPA provides Power Management and Administrative Services.

1.1.20 "Product" means Energy, Capacity Attributes, Environmental Attributes and ancillary products, services or attributes similar to the foregoing that are delivered to the Participants pursuant to the PPA.

1.1.21 "Project" or "PPA" means the Power Purchase Agreement, dated as of _____, 20__ between NCPA and Seller, under which NCPA, on behalf of the Participants, purchases Product from the South Feather Power Project located in Butte County, California, consisting of four existing hydroelectric generating plants under FERC licenses: the Forbestown Powerhouse, the Kelly Ridge Powerhouse, the Sly Creek Powerhouse, and the Woodleaf Powerhouse. Upon final execution of the PPA, the Project shall be deemed a NCPA Project in accordance with the Amended and Restated Facilities Agreement. The PPA has been attached to this Agreement as Exhibit B.

1.1.22 "Project Costs" means all costs charged to and paid by NCPA pursuant to the PPA.

1.1.23 "Party" or "Parties" has the meaning set forth in the preamble hereto; provided that "Third Parties" are entities that are not Party to this Agreement.

1.1.24 "REC" or "Renewable Energy Certificate" means a certificate of renewable energy generation from units that register in the WREGIS system, or other commonly accepted renewable energy generation tracking system or program, which can be used to verify compliance with state and provincial requirements such as RPS.

1.1.25 "Resource Adequacy" means the procurement obligation of load serving entities, including the Participants, as such obligations are described in CPUC Decisions D.04-10-035 and D.05-10-042, and subsequent CPUC decisions addressing Resource Adequacy issues, as those obligations may be altered from time to time in the CPUC Resource Adequacy Rulemakings (R.) 04-04-003 and (R.) 05-12-013 or by any successor proceeding, and all other Resource Adequacy obligations established by any other entity, including the CAISO.

1.1.26 "Resource Adequacy Benefits" means the rights and privileges attached to any generating resource that satisfy any entity's Resource Adequacy obligations.

1.1.27 "Revenue" means , with respect to each Participant, all income, rents, rates, fees, charges, and other moneys derived by the Participant from the

ownership or operation of its Electric System, including, without limiting the generality of the foregoing: (a) all income, rents, rates, fees, charges or other moneys derived from the sale, furnishing and supplying of electric capacity and energy and other services, facilities, and commodities sold, furnished, or supplied through the facilities of its Electric System; (b) the earnings on and income derived from the investment of such income, rents, rates, fees, charges or other moneys to the extent that the use of such earnings and income is limited by or pursuant to law to its Electric System; (c) the proceeds derived by the Participant directly or indirectly from the sale, lease or other disposition of all or a part of the Electric System; and (d) the proceeds derived by Participant directly or indirectly from the consignment and sale of freely allocated greenhouse gas compliance instruments into periodic auctions administered by the State of California under the California Cap-and-Trade Program, provided that such proceeds are a permitted use of auction proceeds, but the term Revenues shall not include (i) customers' deposits or any other deposits subject to refund until such deposits have become the property of the Participant or (ii) contributions from customers for the payment of costs of construction of facilities to serve them.

1.1.28 "RPS" or "Renewable Portfolio Standard Program" means the State of California Renewable Portfolio Standard Program, as codified at California Public Utilities Code Section 399.11, *et seq.*

1.1.29 "Scheduling Protocols" means the applicable provisions of the Amended and Restated Scheduling Coordination Program Agreement, and any other contractual or other arrangements between NCPA and the Participants concerning the scheduling, delivery and metering of the PPA.

1.1.30 "Security Deposit" means the account established by NCPA and funded by the Participants in accordance with Section 5, the funds of which are available for use by NCPA in accordance with the terms and conditions hereof.

1.1.31 "Seller" means South Feather Water and Power Agency, as set forth in recital D of this Agreement, or as otherwise set forth in the PPA.

1.1.32 "Term" has the meaning set forth in Section 10.

1.1.33 "Third Party" means an entity (including a Member) that is not Party to this Agreement

1.1.34 "WREGIS" means Western Renewable Energy Generation Information System, or its functional successor.

1.2 Rules of Interpretation. As used in this Agreement (including the Recitals hereto), unless in any such case the context requires otherwise: The terms "herein," "hereto," "herewith" and "hereof" are references to this Agreement taken as a whole and not to any particular provision; the term "include," "includes" or "including" shall mean "including, for example and without limitation;" and references to a "Section," "subsection," "clause," "Appendix", "Schedule", or "Exhibit" shall mean a Section,

subsection, clause, Appendix, Schedule or Exhibit of this Agreement, as the case may be. All references to a given agreement, instrument, tariff or other document, or law, regulation or ordinance shall be a reference to that agreement, instrument, tariff or other document, or law, regulation or ordinance as such now exists and as may be amended from time to time, or its successor. A reference to a "person" includes any individual, partnership, firm, company, corporation, joint venture, trust, association, organization or other entity, in each case whether or not having a separate legal personality and includes its successors and permitted assigns. A reference to a "day" shall mean a Calendar Day unless otherwise specified. The singular shall include the plural and the masculine shall include the feminine, and *vice versa*.

Section 2. **Purpose.** The purpose of this Agreement is to: (i) set forth the terms and conditions under which NCPA shall enter into the PPA on behalf of the Participants, (ii) authorize NCPA, acting on behalf of the Participants, to engage in all activities related to that basic purpose, and (iii) specify the rights and obligations of NCPA and the Participants with respect to the PPA.

Section 3. **Sale and Purchase of Product.** By executing this Agreement, each Participant acknowledges and agrees to be bound by the terms and conditions of the Agreement, and that the Agreement is written as a "take-or-pay" agreement. Any Product delivered to NCPA under the PPA shall be delivered to each Participant in proportion to such Participant's Project Participation Percentage as set forth in Exhibit A, and each

Participant shall accept and pay for its respective percentage of such Product. To the extent a Participant is unable to accept such deliveries in full, NCPA shall dispose of such surplus in its sole discretion, in such a manner to attempt to maximize Participant value and that Participant shall reimburse to NCPA any costs incurred by NCPA in doing so. Notwithstanding the above, NCPA may allocate Product procured through the PPA among the Participants in such percentages as NCPA may, in its reasonable discretion, determine are necessary, desirable, or appropriate, in order to accommodate Participant transfer rights pursuant to Section 9.

3.1 Scheduling. Product delivered from Seller shall be scheduled for and to the Participants in accordance with Scheduling Protocols, and the terms and conditions of the PPA.

Section 4. Billing and Payments

4.1 Participant Payment Obligations. Each Participant agrees to pay to NCPA each month its respective portion of the Project Costs, Administrative Services Costs, scheduling coordination costs, and all other costs for services provided in accordance with this Agreement and the Amended and Restated Facilities Agreement. In addition to the aforementioned monthly payment obligations, each Participant is obligated to fund: (i) any and all required Security Deposits calculated in accordance with Section 5, and (ii) any working capital requirements for the Project maintained by NCPA as determined, collected and set forth in the Annual Budget.

4.2 Invoices. NCPA will issue an invoice to each Participant for its share of Project Costs, Administrative Services Costs, scheduling coordination costs, and all other costs for services provided in accordance with this Agreement and the Amended and Restated Facilities Agreement. Such invoice may be either the All Resources Bill or separate special invoice, as determined by NCPA. At NCPA's discretion, invoices may be issued to Participants using electronic media or physical distribution.

4.3 Payment of Invoices. All invoices delivered by NCPA (including the All Resources Bill) are due and payable thirty (30) Calendar Days after the date thereof; provided, however, that any amount due on a day other than a Business Day may be paid on the following Business Day.

4.4 Late Payments. Any amount due and not paid by a Participant in accordance with Section 4.3 shall be considered late and bear interest computed on a daily basis until paid at the lesser of (i) the per annum prime rate (or reference rate) of the Bank of America NT&SA then in effect, plus two percent (2%) or (ii) the maximum rate permitted by law.

4.5 Billing Disputes. A Participant may dispute the accuracy of any invoice issued by NCPA under this Agreement by submitting a written dispute to NCPA, within thirty (30) Calendar Days after the date of such invoice; nonetheless the Participant shall pay the full amount billed when due. If a Participant does not timely question or dispute the accuracy of any invoice in writing, then the invoice shall be deemed to be correct. Upon review of a submitted dispute, if an invoice is determined by NCPA to be incorrect,

then NCPA shall issue a corrected invoice and refund any amounts that may be due to the Participant. If NCPA and the Participant fail to agree on the accuracy of an invoice within thirty (30) Calendar Days after the Participant has disputed it, then the General Manager shall promptly submit the dispute to the Commission for resolution. If the Commission and the Participant fail to agree on the accuracy of a disputed invoice within sixty (60) Calendar Days after its submission to the Commission, then the dispute may then be resolved under the mediation and arbitration procedures set forth in Section 12 of this Agreement; provided, however, that prior to resorting to either mediation or arbitration proceedings, the full amount of the disputed invoice must be paid by the Participant.

4.6 Billing/Settlement Data and Examination of Books and Records.

4.6.1 Settlement Data. NCPA shall make billing and settlement data available to the Participants in the All Resources Bill, or other invoice, or upon request. NCPA may also, at its sole discretion, make billing and settlement support information available to Participants using electronic media (e.g. electronic data portal). Procedures and formats for the provision of such electronic data submission may be established by the Commission from time to time. Without limiting the generality of the foregoing, NCPA may, in its reasonable discretion, require the Participants to execute a non-disclosure agreement prior to providing access to the NCPA electronic data portal.

4.6.2 Examination of Books and Records. Any Participant to this Agreement shall have the right to examine the books and records created and maintained by NCPA pursuant to this Agreement at any reasonable, mutually agreed upon time.

Section 5. Security Deposit Administration

5.1 Security Deposit Requirements. Each Participant agrees that any funds deposited at NCPA to satisfy Participant's Security Deposit requirements pursuant to this Agreement shall be irrevocably committed and held by NCPA in the General Operating Reserve, and that such funds may be used by NCPA in accordance with Section 5.1.3. Each Participant's Security Deposit will be accounted separately from and in addition to any other security accounts or deposits maintained pursuant to any other agreement between NCPA and the Participant, or any other such security account or deposits required of Members. In connection with fulfilling the Security Deposit requirements of this Agreement, Participant may elect to use its uncommitted funds held in the General Operating Reserve to satisfy in whole or in part its Security Deposit required under Section 5. If Participant chooses to satisfy in whole or in part its security requirements using its uncommitted funds held in the General Operating Reserve, then Participant is required to execute and deliver to NCPA an Irrevocable Letter of Direction, directing NCPA to utilize Participant's uncommitted General Operating Reserve funds for such

purposes, and the designated funds will thereafter be irrevocably committed and held by NCPA to satisfy the requirements of this Agreement.

5.1.1 Initial Amounts. Each Participant shall insure that sufficient Security Deposit funds have been deposited with and are held by NCPA equal to the highest three (3) months of estimated Project Costs, as estimated by NCPA. Such Security Deposit requirement may be satisfied by Participant in whole or part either in cash, through irrevocable commitment of its uncommitted funds held in the General Operating Reserve in accordance with Section 5.1, or through a clean, irrevocable letter of credit satisfactory to NCPA's General Manager.

5.1.2 Subsequent Deposits. Periodically, and at least quarterly, NCPA shall review and revise its estimate of Project Costs for which Participant shall be obligated to pay under this Agreement. Following such review, NCPA shall determine whether each Participant has a sufficient Security Deposit balance at NCPA. To the extent that any Participant's Security Deposit balance is greater than one hundred and ten percent (110%) of the amount required herein, NCPA shall credit such amount as soon as practicable to the Participant's next following All Resources Bill, or by separate special invoice. To the extent that any Participant's Security Deposit balance is less than ninety percent (90%) of the amount required herein, NCPA shall add such amount as soon as practicable to such Participant's next All Resources Bill, or as necessary, to a special invoice to be paid by Participant upon receipt. Credits or additions shall not be

made to Participants who satisfy these Security Deposit requirements in whole through the use of a letter of credit; provided, that the amount of the letter of credit shall be adjusted, as required from time to time, in a like manner to assure an amount equal to the highest three (3) months of estimated Project Costs is available to NCPA.

5.1.3 Use of Security Deposit Funds. NCPA may use any and all Security Deposit funds held by NCPA (or utilize a letter of credit provided in lieu thereof) to pay any costs it incurs hereunder, including making payments to Seller, without regard to any individual Participant's Security Deposit balance or proportionate share of Project Costs, and irrespective of whether NCPA has issued an All Resources Bill or special invoice for such costs to the Participants or whether a Participant has made timely payments of All Resources Bills or special invoices. Should Participant have satisfied its Security Deposit requirements in whole or part through a letter of credit, NCPA may draw on such letter of credit to satisfy Participant's obligations hereunder at NCPA's sole discretion. Notwithstanding the foregoing, if any Participant fails to pay any costs incurred by NCPA pursuant to this Agreement, NCPA shall first use that non-paying Participant's Security Deposit and shall not use any other Participants' Security Deposit until such non-paying Participant's Security Deposit has been exhausted.

5.1.4 Accounting. If Security Deposit funds or a letter of credit are used by NCPA to pay any costs it incurs hereunder as described in Section 5.1.3, then NCPA

will maintain a detailed accounting of each Participant's shares of funds withdrawn, and upon the collection of all or a part of such withdrawn funds, NCPA will credit back to each non-defaulting Participant the funds collected in proportion to such non-defaulting Participant's share of funds initially withdrawn.

5.1.5 Emergency Additions. In the event that funds are withdrawn pursuant to Section 5.1.3, or if the Security Deposit held by NCPA is otherwise insufficient to allow for NCPA to pay any invoice, demand, request for further assurances by Seller, or claims, NCPA shall notify all Participants of the deficiency. In conjunction with such notice, NCPA shall send a special or emergency assessment invoice to the Participant or Participants that caused or are otherwise responsible for the deficiency. Each Participant of such an invoice shall pay to NCPA such assessment when and if assessed by NCPA within two (2) Business Days of the invoice date of the assessment, or shall consent to and direct NCPA to draw on any existing letter of credit Participant has established for such purposes. In the event that the Participant or Participants that caused or are otherwise responsible for the deficiency cannot, does not or will not pay to NCPA the special or emergency assessment within two (2) Business Days after the invoice date, NCPA shall immediately submit a special or emergency invoice to all remaining Participants, and such remaining Participants shall pay to NCPA such assessment within two (2) Business Days after the invoice date of

the assessment, or shall consent to and direct NCPA to draw on any existing letter of credit that Participant has established for such purposes.

5.1.6 Security Deposit Interest. NCPA shall maintain a detailed accounting of each Participant's Security Deposits, and withdrawals of such funds, held by NCPA. Security Deposits held by NCPA shall be invested by NCPA in accordance with the General Operating Reserve policies and investment policies adopted by the NCPA Commission. Interest earned on the Security Deposit funds shall be proportionately credited to the Participants in accordance with their weighted average balances held therein. Any Security Deposit losses caused by early termination of investments shall be allocated among the Participants in accordance with the General Operating Reserve provisions and guidelines approved by the Commission, as the same may be amended from time to time; provided, however, to the extent that either the General Operating Reserve provisions and guidelines do not apply or the Security Deposit is not adequate to cover the losses, then such losses shall be allocated among the Participants in accordance with their proportionate Security Deposit balances.

5.1.7 Return of Funds. Upon termination or a permitted withdrawal of a Participant in accordance with this Agreement, the affected Participant may apply to NCPA for the return of their share of Security Deposit funds ninety (90) days after the effective date of such termination or withdrawal. However, NCPA shall, in its sole but

reasonable discretion, as determined by the NCPA General Manager, estimate the then outstanding liabilities of the Participant, including any estimated contingent liabilities and shall retain all such funds, if any, until all such liabilities have been fully paid or otherwise satisfied in full. After all such liabilities have been satisfied in full, as determined by NCPA's General Manager, any remaining balance of the Participant's share of the Security Deposit will be refunded to the Participant within sixty (60) days thereafter.

Section 6. **Cooperation and Further Assurances.** Each of the Parties agree to provide such information, execute and deliver any instruments and documents and to take such other actions as may be necessary or reasonably requested by any other Party which are consistent with the provisions of this Agreement and which do not involve the assumption of obligations other than those provided for in this Agreement, in order to give full effect to this Agreement and to carry out the intent of this Agreement. The Parties agree to cooperate and act in good faith in connection with obtaining any credit support required in order to satisfy the requirements of this Agreement.

Section 7. **Participant Covenants and Defaults**

7.1 Each Participant covenants and agrees: (i) to make payments to NCPA, from its Electric System Revenues, of its obligations under this Agreement as an operating expense of its Electric System; (ii) to fix the rates and charges for services provided by its Electric System, so that it will at all times have sufficient Revenues to meet the obligations

of this Agreement, including the payment obligations; (iii) to make all such payments due NCPA under this Agreement whether or not there is an interruption in, interference with, or reduction or suspension of services provided under this Agreement, such payments not being subject to any reduction, whether by offset or otherwise, and regardless of whether any reasonable dispute exists; and (iv) to operate its Electric System, and the business in connection therewith, in accordance with Good Utility Practices.

7.2 Events of Default. An Event of Default under this Agreement shall exist upon the occurrence of any one or more of the following by a Participant (the "Defaulting Participant"):

(i) the failure of any Participant to make any payment in full to NCPA when due;

(ii) the failure of a Participant to perform any covenant or obligation of this Agreement where such failure is not cured within thirty (30) Calendar Days following receipt of a notice from NCPA demanding cure; provided, that this subsection shall not apply to any failure to make payments specified by subsection 7.2 (i));

(iii) if any representation or warranty of a Participant material to the services provided hereunder shall prove to have been incorrect in any material respect when made and the Participant does not cure the facts underlying such incorrect representation or warranty so that the representation or warranty becomes true and correct within thirty (30) Calendar Days after the date of receipt of notice from NCPA demanding cure; or

(iv) if a Participant is in default or in breach of any of its covenants or obligations under any other agreement with NCPA and such default or breach is not cured within the time periods specified in such agreement.

7.3 Uncontrollable Forces. A Party shall not be considered to be in default in respect of any obligation hereunder if prevented from fulfilling such obligation by reason of Uncontrollable Forces; provided, that in order to be relieved of an Event of Default due to Uncontrollable Forces, a Party affected by an Uncontrollable Force shall:

(i) first provide oral notice to the General Manager using telephone communication within two (2) Business Days after the onset of the Uncontrollable Force, and provide subsequent written notice to the General Manager and all other Parties within ten (10) Business Days after the onset of the Uncontrollable Force, describing its nature and extent, the obligations which the Party is unable to fulfill, the anticipated duration of the Uncontrollable Force, and the actions which the Party will undertake so as to remove such disability and be able to fulfill its obligations hereunder; and

(ii) use due diligence to place itself in a position to fulfill its obligations hereunder and if unable to fulfill any obligation by reason of an Uncontrollable Force such Party shall exercise due diligence to remove such disability with reasonable dispatch; provided, that nothing in this subsection shall require a Party to settle or compromise a labor dispute.

7.4 Cure of an Event of Default. An Event of Default shall be deemed cured only if such default shall be remedied or cured within the time periods specified in Section 7.2 above, as may be applicable, provided, however, upon request of the Defaulting Participant the Commission may waive the default at its sole discretion, where such waiver shall not be unreasonably withheld.

7.5 Remedies in the Event of Uncured Default. Upon the occurrence of an Event of Default which is not cured within the time limits specified in Section 7.2, without limiting other rights or remedies available under this Agreement, at law or in equity, and without constituting or resulting in a waiver, release or estoppel of any right, action or cause of action NCPA may have against the Defaulting Participant, NCPA may take any or all of the following actions:

(i) suspend the provision of services under this Agreement to such Defaulting Participant; or

(ii) demand that the Defaulting Participant provide further assurances to guarantee the correction of the default, including the collection of a surcharge or increase in electric rates, or such other actions as may be necessary to produce necessary Revenues to correct the default.

7.6 Effect of Suspension.

7.6.1 Generally. The suspension of this Agreement will not terminate, waive, or otherwise discharge any ongoing or undischarged liabilities, credits or

obligations arising from this Agreement until such liabilities, credits or obligations are satisfied in full.

7.6.2 Suspension. If performance of all or any portion of this Agreement is suspended by NCPA with respect to a Participant in accordance with subsection 7.5(i), then such Participant shall pay any and all costs incurred by NCPA as a result of such suspension including reasonable attorney's fees, the fees and expenses of other experts, including auditors and accountants, or other reasonable and necessary costs associated with such suspension and any portion of the Project Costs, scheduling and dispatch costs, and Administrative Services Costs that were not recovered from such Participant as a result of such suspension.

Section 8. Administration of Agreement

8.1 Commission. The Commission is responsible for the administration of this Agreement. Each Participant shall be represented by its Commissioner or their designated alternate Commissioner ("Alternate") pursuant to the Joint Powers Agreement. Each Commissioner shall have authority to act for the Participant represented with respect to matters pertaining to this Agreement.

8.2 Forum. Whenever any action anticipated by this Agreement is required to be jointly taken by the Participants, such action shall be taken at regular or special meetings of the NCPA Commission.

8.3 Quorum. For purposes of acting upon matters that relate to administration of this Agreement, a quorum of the Participants shall consist of those Commissioners, or their designated Alternate, representing a numerical majority of the Participants.

8.4 Voting. Each Participant shall have the right to cast one vote with respect to matters pertaining to this Agreement. A unanimous vote of all Participants shall be required for action regarding: (i) any transfer of rights to a Third Party as described in Section 9 of this Agreement; and (ii) for matters related to any of the following actions as provided for in the PPA: (a) exercising any early termination provisions as set forth in Section 2.4 of the PPA, and (b) exercising any assignment rights as set forth in Section 12.7 of the PPA. For all other matters pertaining to this Agreement, a majority vote of the Participants shall be required for action.

Section 9. Transfer of Rights by Participants

9.1 A Participant has the right to make transfers, sales, assignments and exchanges (collectively "transfers(s)") of any portion of its Project Participation Percentage and rights thereto, subject to the approval provisions in Section 8.4 of this Agreement, provided that the transferee satisfies all applicable criterion in the PPA. If a Participant desires to transfer a portion or its entire share of the Project for a specific time interval, or permanently, then NCPA will, if requested by such Participant, use its best efforts to transfer that portion of the Participant's share of the Project.

9.2 Before a Participant may transfer an excess Project share pursuant to Section 9.1 to any person or entity other than a Participant, it shall give all other Participants the right to purchase the share on the same terms and conditions. Before a Participant may transfer an excess Project share pursuant to section 9.1 to any person or entity other than a Member, it shall give all Members the right to purchase the share on the same terms and conditions. Such right shall be exercised within thirty (30) days of receipt of notice of said right.

No transfer shall relieve a Participant of any of its obligations under this Agreement except to the extent that NCPA receives payment of these obligations from a transferee.

Section 10. Term and Termination. This Agreement shall become effective when it has been duly executed by all Participants, and delivered to and executed by NCPA (the "Effective Date"). NCPA shall notify all Participants in writing of the Effective Date. The Term of this Agreement shall be coterminous with the PPA, and shall commence on the Effective Date, and shall continue through the term of the PPA.

Section 11. Withdrawal of Participants. No Participant may withdraw from this Agreement except as otherwise provided for herein.

Section 12. Settlement of Disputes and Arbitration. The Parties agree to make best efforts to settle all disputes among themselves connected with this Agreement as a matter of normal business under this Agreement. The procedures set forth in Section 10 of the

Power Management and Administrative Services Agreement shall apply to all disputes that cannot be settled by the Participants themselves; provided, that the provisions of Section 4.5 shall first apply to all disputes involving invoices prepared by NCPA.

Section 13. Miscellaneous

13.1 Confidentiality. The Parties will keep confidential all confidential or trade secret information made available to them in connection with this Agreement, to the extent possible, consistent with applicable laws, including the California Public Records Act. Confidential or trade secret information shall be marked or expressly identified as such.

If a Party ("Receiving Party") receives a request from a Third Party for access to, or inspection, disclosure or copying of, any other Party's (the "Supplying Party") confidential data or information, which the Receiving Party has possession of ("Disclosure Request"), then the Receiving Party shall provide notice and a copy of the Disclosure Request to the Supplying Party within three (3) Business Days after receipt of the Disclosure Request. Within three (3) Business Days after receipt of such notice, the Supplying Party shall provide notice to the Receiving Party either:

(i) that the Supplying Party believes there are reasonable legal grounds for denying or objecting to the Disclosure Request, and the Supplying Party requests the Receiving Party to deny or object to the Disclosure Request with respect to identified confidential information. In such case, the Receiving Party shall deny the Disclosure Request and the Supplying Party shall defend the denial of the Disclosure Request at its

sole cost, and it shall indemnify the Receiving Party for all costs associated with denying or objecting to the Disclosure Request. Such indemnification by the Supplying Party of the Receiving Party shall include all of the Receiving Party's costs reasonably incurred with respect to denial of or objection to the Disclosure Request, including but not limited to costs, penalties, and the Receiving Party's attorney's fees; or

(ii) that the Receiving Party may grant the Disclosure Request without any liability by the Receiving Party to the Supplying Party.

13.2 Indemnification and Hold Harmless. Subject to the provisions of Section 13.4, each Participant agrees to indemnify, defend and hold harmless NCPA and its Members, including their respective governing boards, officials, officers, agents, and employees, from and against any and all claims, suits, losses, costs, damages, expenses and liability of any kind or nature, including reasonable attorneys' fees and the costs of litigation, including experts, to the extent caused by any acts, omissions, breach of contract, negligence (active or passive), gross negligence, recklessness, or willful misconduct of that Participant, its governing officials, officers, employees, subcontractors or agents, to the maximum extent permitted by law.

13.3 Several Liabilities. No Participant shall, in the first instance, be liable under this Agreement for the obligations of any other Participant or for the obligations of NCPA incurred on behalf of other Participants. Each Participant shall be solely responsible and liable for performance of its obligations under this Agreement, except as otherwise

provided for herein. The obligation of each Participant under this Agreement is, in the first instance, a several obligation and not a joint obligation with those of the other Participants.

Notwithstanding the foregoing, the Participants acknowledge that any debts or obligations incurred by NCPA under this Agreement on behalf of any of them shall be borne solely by such Participants in proportion to their respective Project Participation Percentages, and not by non-Participant Members of NCPA, pursuant to Article IV, Section 3(b) of the Joint Powers Agreement.

In the event that a Participant should fail to pay its share of the debts or obligations incurred by NCPA as required by this Agreement, the remaining Participants shall, in proportion to their Project Participation Percentages, pay such unpaid amounts and shall be reimbursed by the Participant failing to make such payments.

13.4 No Consequential Damages. FOR ANY BREACH OF ANY PROVISION OF THIS AGREEMENT FOR WHICH AN EXPRESS REMEDY OR MEASURE OF DAMAGES IS PROVIDED IN THIS AGREEMENT, THE LIABILITY OF THE DEFAULTING PARTY SHALL BE LIMITED AS SET FORTH IN SUCH PROVISION, AND ALL OTHER DAMAGES OR REMEDIES ARE HEREBY WAIVED. IF NO REMEDY OR MEASURE OF DAMAGE IS EXPRESSLY PROVIDED, THE LIABILITY OF THE DEFAULTING PARTY SHALL BE LIMITED TO ACTUAL DAMAGES ONLY AND ALL OTHER DAMAGES AND REMEDIES ARE HEREBY WAIVED. IN NO EVENT SHALL NCPA OR ANY

PARTICIPANT OR THEIR RESPECTIVE SUCCESSORS, ASSIGNS, REPRESENTATIVES, DIRECTORS, OFFICERS, AGENTS, OR EMPLOYEES BE LIABLE FOR ANY LOST PROFITS, CONSEQUENTIAL, SPECIAL, EXEMPLARY, INDIRECT, PUNITIVE, OR INCIDENTAL LOSSES OR DAMAGES, INCLUDING LOSS OF USE, LOSS OF GOODWILL, LOST REVENUES, LOSS OF PROFIT OR LOSS OF CONTRACTS EVEN IF SUCH PARTY HAS BEEN ADVISED OF THE POSSIBILITY OF SUCH DAMAGES, AND NCPA AND EACH PARTICIPANT EACH HEREBY WAIVES SUCH CLAIMS AND RELEASES EACH OTHER AND EACH OF SUCH PERSONS FROM ANY SUCH LIABILITY.

The Parties acknowledge that California Civil Code section 1542 provides that: "A general release does not extend to claims which the creditor does not know or suspect to exist in his or her favor at the time of executing the release, which if known by him or her must have materially affected his or her settlement with the debtor." The Parties waive the provisions of section 1542, or other similar provisions of law, and intend that the waiver and release provided by this Section of this Agreement shall be fully enforceable despite its reference to future or unknown claims.

13.5 Waiver. No waiver of the performance by a Party of any obligation under this Agreement with respect to any default or any other matter arising in connection with this Agreement shall be effective unless given by the Commission or the governing body of a Participant, as applicable. Any such waiver by the Commission in any particular

instance shall not be deemed a waiver with respect to any subsequent performance, default or matter.

13.6 Amendments. Except where this Agreement specifically provides otherwise, this Agreement may be amended only by written instrument executed by the Parties with the same formality as this Agreement.

13.7 Assignment of Agreement.

13.7.1 Binding Upon Successors. This Agreement shall inure to the benefit of and shall be binding upon the respective successors and assignees of the Parties to this Agreement.

13.7.2 No Assignment. Neither this Agreement, nor any interest herein, shall be transferred or assigned by a Party hereto except with the consent in writing of the other Parties hereto, which consent shall not be unreasonably withheld.

13.8 Severability. In the event that any of the terms, covenants or conditions of this Agreement or the application of any such term, covenant or condition, shall be held invalid as to any person or circumstance by any court having jurisdiction, all other terms, covenants or conditions of this Agreement and their application shall not be affected thereby, but shall remain in force and effect unless the court holds that such provisions are not severable from all other provisions of this Agreement.

13.9 Governing Law. This Agreement shall be interpreted, governed by, and construed under the laws of the State of California.

13.10 Headings. All indices, titles, subject headings, section titles and similar items are provided for the purpose of convenience and are not intended to be inclusive, definitive, or affect the meaning of the contents of this Agreement or the scope thereof.

13.11 Notices. Any notice, demand or request required or authorized by this Agreement to be given to any Party shall be in writing, and shall either be personally delivered to a Participant's Commissioner or Alternate, and to the General Manager, or shall be transmitted to the Participant and the General Manager at the addresses shown on the signature pages hereof. The designation of such addresses may be changed at any time by written notice given to the General Manager who shall thereupon give written notice of such change to each Participant. All such notices shall be deemed delivered when personally delivered, two (2) Business Days after deposit in the United States mail first class postage prepaid, or on the first Business Day following delivery through electronic communication.

13.12 Warranty of Authority. Each Party represents and warrants that it has been duly authorized by all requisite approval and action to execute and deliver this Agreement and that this Agreement is a binding, legal, and valid agreement enforceable in accordance with its terms. Upon execution of this Agreement, each Participant shall deliver to NCPA a resolution of the governing body of such Participant evidencing approval of and authority to enter into this Agreement.

13.13 Counterparts. This Agreement may be executed in any number of counterparts, and each executed counterpart shall have the same force and effect as an original instrument and as if all the signatories to all of the counterparts had signed the same instrument. Any signature page of this Agreement may be detached from any counterpart of this Agreement without impairing the legal effect of any signatures thereon, and may be attached to another counterpart of this Agreement identical in form hereto but having attached to it one or more signature pages.

13.14 Venue. In the event that a Party brings any action under this Agreement, the Parties agree that trial of such action shall be vested exclusively in the state courts of California in the County of Placer or in the United States District Court for the Eastern District of California.

13.15 Attorneys' Fees. If a Party to this Agreement brings any action, including an action for declaratory relief, to enforce or interpret the provisions of this Agreement, then each Party shall bear its own fees and costs, including attorneys' fees, associated with the action.

13.16 Counsel Representation. Pursuant to the provisions of California Civil Code Section 1717 (a), each of the Parties were represented by counsel in the negotiation and execution of this Agreement and no one Party is the author of this Agreement or any of its subparts. Those terms of this Agreement which dictate the responsibility for bearing any attorney's fees incurred in arbitration, litigation or settlement in a manner inconsistent

with the provisions of Section 13.2 were intentionally so drafted by the Parties, and any ambiguities in this Agreement shall not be interpreted for or against a Party by reason of that Party being the author of the provision.

13.17 No Third Party Beneficiaries. Nothing contained in this Agreement is intended by the Parties, nor shall any provision of this Agreement be deemed or construed by the Parties, by any third person or any Third Parties, to be for the benefit of any Third Party, nor shall any Third Party have any right to enforce any provision of this Agreement or be entitled to damages for any breach by the Parties of any of the provisions of this Agreement.

IN WITNESS WHEREOF, NCPA and each Participant have, by the signature of its duly authorized representative shown below, executed and delivered a counterpart of this Agreement.

NORTHERN CALIFORNIA
POWER AGENCY
651 Commerce Drive
Roseville, CA 95678

By:_____
Title: _____
Date:_____

Approved as to form:

By:_____
Its: General Counsel
Date: _____

Attestation (if applicable):

By:_____
Its:_____
Date: _____

CITY OF HEALDSBURG
401 Grove Street
Healdsburg, CA 95448

By:_____
Title: _____
Date:_____

Approved as to form:

By:_____
Its: City Attorney
Date:_____

Attestation (if applicable):

By:_____
Its:_____
Date: _____

CITY OF LODI
221 W. Pine Street
Lodi, CA 95240

_____
By:_____
Title: _____
Date: _____

Approved as to form:

_____
By:_____
Its: City Attorney
Date: _____

Attestation (if applicable)

_____
By:_____
Its:_____
Date: _____

CITY OF LOMPOC
100 Civic Center Plaza
Lompoc, CA 93436

_____
By:_____
Title: _____
Date: _____

Approved as to form:

_____
By: _____
Its: City Attorney
Date: _____

Attestation (if applicable)

_____
By:_____
Its:_____
Date: _____

CITY OF OAKLAND, acting
by and through its
Board of Port Commissioners
530 Water Street
Oakland, CA 94607

By: _____
Title: _____
Date: _____

Approved as to form:

By: _____
Its: Port General Counsel
Date: _____

Attestation (if applicable)

By: _____
Its: _____
Date: _____

CITY OF ROSEVILLE
311 Vernon Street
Roseville, CA 95678

By: _____
Title: _____
Date: _____

Approved as to form:

By: _____
Its: City Attorney
Date: _____

Attestation (if applicable)

By: _____
Its: _____
Date: _____

CITY OF SANTA CLARA
1500 Warburton Avenue
Santa Clara, CA 95050

By:_____
Title: _____
Date: _____

Approved as to form:

By: _____
Its: City Attorney
Date: _____

Attestation (if applicable)

By:_____
Its:_____
Date: _____

SAN FRANCISCO BAY AREA RAPID TRANSIT DISTRICT
300 Lakeside Drive, 16th Floor
Oakland, CA 94612

By:_____
Title: _____
Date: _____

Approved as to form:

By: _____
Its: City Attorney
Date: _____

Attestation (if applicable)

By:_____
Its:_____
Date: _____

CITY OF UKIAH
300 Seminary Avenue
Ukiah, CA 95482

_____

By:_____
Title: _____
Date: _____

Approved as to form:

_____

By: _____
Its: City Attorney
Date: _____

Attestation (if applicable)

_____

By:_____
Its:_____
Date:_____

EXHIBIT A

PROJECT PARTICIPATION PERCENTAGES

Concurrent to the Effective Date of this Agreement, the Project Participation Percentages contained in this Exhibit A may be updated in the event that one or more of the Members shown in the preliminary list of Participants do not become a Participant. In the event that one or more of the Members shown in the preliminary list of Participants do not become a Participant, the Project Participation Percentage for that Member will be reallocated to the City of Roseville and the City of Santa Clara in equal shares. NCPA shall notify all Participants of the final Project Participation Percentages in writing concurrent with the Effective Date of this Agreement, and if necessary NCPA shall provide an updated Exhibit A to the Participants showing the final Project Participation Percentages.

Preliminary List of Participants

City of Healdsburg	**2.0 MW, or 1.65%**
City of Lodi	**10.0 MW, or 8.23%**
City of Lompoc	**2.5 MW, or 2.06%**
City of Roseville	**20.0 MW, 16.46%**
City of Santa Clara	**78.0 MW, 64.2%**
City of Ukiah	**2.0 MW, 1.65%**
Port of Oakland	**3.0 MW, or 2.47%**
San Francisco Bay Area Rapid Transit District	**4.0 MW, or 3.29%**

Final List of Participants

EXHIBIT B

PPA

The Power Purchase Agreement between South Feather Water and Power Agency and Northern California Power Agency has been attached to this Agreement as Exhibit B.

POWER PURCHASE AGREEMENT

BETWEEN

SOUTH FEATHER WATER AND POWER AGENCY

AND

NORTHERN CALIFORNIA POWER AGENCY

Dated as of [_____], 20[__]

Table of Contents

ARTICLE I DEFINITIONS AND INTERPRETATION 3

Section 1.1 Definitions 3

Section 1.2 Interpretation 15

ARTICLE II EFFECTIVE DATE, TERM, AND EARLY TERMINATION 16

Section 2.1 Effective Date 16

Section 2.2 Term 16

Section 2.3 Survivability 17

Section 2.4 Early Termination 17

ARTICLE III OPERATION AND MAINTENANCE OF THE FACILITY 17

Section 3.1 General Operational Requirements 17

Section 3.2 Operation and Maintenance Plan 18

Section 3.3 Decommissioning and Other Costs 18

Section 3.4 Environmental Credit 18

Section 3.5 Outages 18

ARTICLE IV COMPLIANCE DURING OPERATIONS 20

Section 4.1 Buyers' Rights to Monitor in General 20

Section 4.2 Effect of Review by Buyer 20

Section 4.3 No Liens 21

ARTICLE V PURCHASE AND SALE OF PRODUCT 21

Section 5.1 Purchases by Buyer 21

Section 5.2 Sale of Environmental Attributes 21

ARTICLE VI TRANSMISSION AND SCHEDULING; TITLE AND RISK OF LOSS 21

Section 6.1 Delivery 21

Section 6.2 Scheduling Coordinator; CAISO Cost Allocation 22

Section 6.3 Interconnection Facilities 22

Section 6.4 Forecasting 22

Section 6.5 Curtailment 24

Section 6.6 No Payment 25

Section 6.7 Title; Risk of Loss 25

Section 6.8 RPS and EPS Compliance 25

Section 6.9 Compliance Expenditure Cap 25

ARTICLE VII ENVIRONMENTAL ATTRIBUTES **26**
Section 7.1 Transfer of Environmental Attributes 26
Section 7.2 Reporting of Ownership of Environmental Attributes 27
Section 7.3 Environmental Attributes 27
Section 7.4 WREGIS 27
Section 7.5 Further Assurances 27
ARTICLE VIII CAPACITY RIGHTS **28**
Section 8.1 Capacity Rights 28
Section 8.2 Covenant Regarding Capacity Rights 28
Section 8.3 Further Assurances 28
Section 8.4 Resource Adequacy Failure 28
ARTICLE IX BILLING; PAYMENT; AUDITS; METERING; ATTESTATIONS; POLICIES **29**
Section 9.1 Billing and Payment 29
Section 9.2 Calculation of Energy Delivered; Invoices and Payment 29
Section 9.3 Disputed Invoices 30
Section 9.4 Right of Setoff 31
Section 9.5 Records and Audits 31
Section 9.6 Electric Metering Devices 32
Section 9.7 Taxes 33
ARTICLE X REPRESENTATIONS, WARRANTIES and COVENANTS **33**
Section 10.1 Representations and Warranties of Buyer 33
Section 10.2 Representations and Warranties of Seller 34
ARTICLE XI DEFAULT; TERMINATION AND REMEDIES; PERFORMANCE DAMAGE **35**
Section 11.1 Default 35
Section 11.2 Default Remedy 36
Section 11.3 Termination for Default 37
ARTICLE XII MISCELLANEOUS **38**
Section 12.1 Authorized Representative 38
Section 12.2 Notices 39
Section 12.3 Dispute Resolution 39
Section 12.4 Further Assurances; Change in Electric Market Design 40
Section 12.5 No Dedication of Facilities 40
Section 12.6 Force Majeure 40

Section 12.7	Assignment of Agreement	42
Section 12.8	Ambiguity	42
Section 12.9	Attorneys' Fees & Costs	42
Section 12.10	Voluntary Execution	42
Section 12.11	Entire Agreement; Amendments	42
Section 12.12	Governing Law	43
Section 12.13	Venue	43
Section 12.14	Execution in Counterparts	43
Section 12.15	Effect of Section Headings	43
Section 12.16	Waiver; Available Remedies	43
Section 12.17	Relationship of the Parties	43
Section 12.18	Third Party Beneficiaries	43
Section 12.19	Indemnification; Damage or Destruction; Insurance; Condemnation; Limit of Liability	44
Section 12.20	Severability	45
Section 12.21	Confidentiality	46
Section 12.22	Mobile-Sierra	46

Appendices

APPENDIX A	CONTRACT PRICE
APPENDIX B	FACILITY DESCRIPTION
APPENDIX C	SCHEDULING AND OPERAITONS
APPENDIX D	FORM OF ATTESTATION
APPENDIX E	INSURANCE
APPENDIX F	BUYER AND SELLER BILLING, NOTIFICATION AND SCHEDULING CONTACT INFORMATION

POWER PURCHASE AGREEMENT
BETWEEN
NORTHERN CALIFORNIA POWER AGENCY
AND
SOUTH FEATHER WATER AND POWER AGENCY

THIS POWER PURCHASE AGREEMENT (this "***Agreement***"), dated as of this [____] day of [_____], 20[__], is being entered into by and between the NORTHERN CALIFORNIA POWER AGENCY ("***Buyer***"), a joint powers agency and a public entity organized under the laws of the State of California and created under the provisions of the California Joint Exercise of Powers Act found in Chapter 5 of Division 7 of Title 1 of the Government Code of the State of California, beginning at California Government Code Section 6500, et. seq., ("***Act***") and the "Amended and Restated Northern California Power Agency Joint Powers Agreement" entered into pursuant to the provisions of the Act among Buyer and Buyer's members, dated as of January 1, 2008, and SOUTH FEATHER WATER AND POWER AGENCY, an irrigation district formed under the Irrigation District Act (Division 11 of the California Water Code) of the State of California ("***Seller***"). Each of Buyer and Seller is referred to individually in this Agreement as a "***Party***" and together as the "***Parties.***"

RECITALS

WHEREAS, Buyer's members have adopted or are adopting policies that are designed to increase the amount of energy that they provide to their retail customers from eligible renewable energy resources and carbon free resources to comply with the California Renewable Energy Resources Act and other applicable requirements; and

WHEREAS, Seller owns and operates four existing hydroelectric generating plants operating under FERC licenses: the Forbestown Powerhouse (37.5 MW), the Kelly Ridge Powerhouse (11.0 MW), the Sly Creek Powerhouse (13.0) MW and the Woodleaf Powerhouse (60.0 MW) (the "Facility or as otherwise referred to as the South Feather Power Project"); and

WHEREAS, the South Feather Power Project operates under FERC license no. 2088, which is currently being operated under an expired license, the terms of which extend on a year to year basis until a new license is issued; and

WHEREAS, the Kelly Ridge Powerhouse and Sly Creek Powerhouse ("the Renewable Facilities") are eligible renewable energy resource certified by the CEC; and

WHEREAS, Buyer is interested in purchasing Products from the Facilities; and

WHEREAS, Seller has agreed to sell to Buyer, and Buyer has agreed to purchase from Seller, certain energy, capacity rights and associated environmental attributes for the purchase price set forth in Appendix A; and

WHEREAS, the Parties desire to set forth the terms and conditions pursuant to which such sales and purchases shall be made.

AGREEMENT

NOW, THEREFORE, in consideration of the foregoing Recitals, which are incorporated herein, the mutual covenants and agreements herein set forth, and other good and valuable consideration, the sufficiency of which is hereby acknowledged, the Parties agree as follows:

ARTICLE I
DEFINITIONS AND INTERPRETATION

Section 1.1 Definitions.

The following terms in this Agreement and the appendices hereto shall have the following meanings when used with initial capitalized letters:

"**Act**" has the meaning set forth in the preamble of this Agreement.

"**Affiliate**" means, as to any Person, any other Person that, directly or indirectly, is in control of, is controlled by or is under common control with such Person or, as is appropriate given the context, is a director or officer of such Person or of an Affiliate of such Person. As used in this Agreement, "control" shall mean the possession, directly or indirectly, of the power to direct or cause the direction of management, policies or activities of a Person, whether through ownership of voting securities, by contract or otherwise.

"**Agreement**" has the meaning set forth in the preamble of this Agreement, and includes the Appendices attached hereto.

"**Agreement Term**" has the meaning set forth in Section 2.2(a).

"**Annual True-Up Credit**" has the meaning set forth in Appendix A.

"**ASME**" means American Society of Mechanical Engineers.

"**Assumed Daily Deliveries**" has the meaning set forth in Section 11.3(c).

"**ASTM**" means American Society for Testing and Materials.

"**Authorized Auditors**" means representatives of Buyer or Buyer's Authorized Representative who are authorized to conduct audits on behalf of Buyer.

"**Authorized Representative**" means, with respect to each Party, the Person designated as such Party's authorized representative pursuant to Section 12.1.

"**Available Generating Capacity**" means the Contract Capacity less the amount of capacity that is not available due to an outage.

"**Availability Incentive Payment**" has the meaning set forth in the CAISO Tariff.

"**Availability Standard**" has the meaning set forth in the CAISO Tariff.

"**AWS**" means American Welding Society.

"**Bankruptcy**" means any case, action or proceeding under any bankruptcy, reorganization, debt arrangement, insolvency or receivership law or any dissolution or liquidation proceeding commenced by or against a Person and, if such case, action or proceeding is not commenced by such Person, such case, action or proceeding shall be consented to or acquiesced in by such Person or shall result in an order for relief or shall remain undismissed for ninety (90) days.

"**Base Output**" has the meaning set forth in Appendix A.

"**Base Output Compensation**" has the meaning set forth in Appendix A.

"**Base Output Monthly Payment**" has the meaning set forth in Appendix A.

"**Brown Act**" has the meaning set forth in Section 12.21(b).

"**Business Day**" means any day that is not a Saturday, a Sunday, or a day on which commercial banks are authorized or required to be closed in Los Angeles, California or New York, New York.

"**Buyer**" has the meaning set forth in the preamble of this Agreement.

"Buyer Curtailment" has the meaning set forth in Section 6.5(b).

"**Buyer Indemnitee**" has the meaning set forth in Section 12.19(a).

"**Cal-OSHA**" means the California Occupational Safety & Health Administration.

"**CAISO**" means the California Independent System Operator.

"**CAISO Costs**" means (i) all current and future costs, expenses, fees, charges, credits and other amounts assessed by the CAISO to Seller or to Buyer in connection with the Facilities and (ii) any and all costs, expenses, fees, charges and other amounts incurred in connection with performing Scheduling services, settlement services and serving as the Scheduling Coordinator.

"CAISO Master File" has the meaning set forth in the CAISO Tariff.

"**CAISO Tariff**" means the CAISO FERC Electric Tariff, Fifth Replacement Volume, including the rules, protocols, procedures and standards attached thereto and any replacement thereof or successor thereto in effect.

"**CAMD**" means the Clean Air Markets Division of the EPA and any other state, regional or federal or intergovernmental entity or Person that is given authorization or jurisdiction or both over a program involving the registration, validation, certification or transferability of Environmental Attributes.

"**Capacity Rights**" means the rights, whether in existence as of the Effective Date or arising thereafter during the Agreement Term, to capacity, Resource Adequacy Attributes, Local Capacity Requirement Attributes, flexible capacity attributes, operating reserves, regulation services, and other associated attributes or reserves, or any of the foregoing as may in the future be defined by the CAISO, or any other balancing authority, reliability entity or Governmental Authority, associated with the electric generating capability of the Facilities, including the right to resell such rights.

"**CEC**" means California's State Energy Resources Conservation and Development Commission, also known as the California Energy Commission.

"**CEC Certified**" means that the CEC has certified that the Facility is an eligible renewable energy resource in accordance with RPS Law.

"**CEC Performance Standard**" means, at any time, the applicable greenhouse gas emissions performance standard in effect at such time for electric generation facilities that are owned or operated (or both) by local publicly owned electric utilities, or for which a local publicly owned electric utility has entered into a contractual agreement for the purchase of power from such facilities, as established by the CEC or other Governmental Authority having jurisdiction over Buyer.

"**CEQA**" means the California Environmental Quality Act, California Public Resources Code §§ 21000, et seq.

"**Change in Law**" means a material change to any WREGIS standards, rules, or requirements, or a change to any federal, state, local or other law (including any environmental law, EPS Law or RPS Law), resolution, standard, code, rule, ordinance, directive, regulation, order, judgment, decree, ruling, determination, permit, certificate, authorization, or approval of a Governmental Authority, including the adoption of any new law, resolution, standard, code, rule, ordinance, directive, regulation, order, judgment, decree, ruling, determination, permit, certificate, authorization, or approval.

"**Compliance Showings**" means the applicable load serving entities compliance with the resource adequacy requirements of its applicable regulatory authority for an applicable Showing Month.

"**Conditional Use Permit**" means the conditional use permits for the Facility.

"**Confidential Information**" has the meaning set forth in Section 12.21(a).

"**Contract Capacity**" means the amount of installed Facility capacity set forth in Appendix B.

"**Contract Price**" means, for any period of time, the Contract Price set forth in Appendix A.

"**Contract Year**" means (a) with respect to the first (1st) Contract Year, the period beginning on the Initial Delivery Date and extending through December 31 of the calendar year in which the Initial Delivery Date occurs, (b) with respect to the second (2nd) through the twentieth (20th) Contract Years, the applicable calendar year, and (c) with respect to the twenty first (21st) Contract Year, the period beginning on January 1 of the applicable calendar year and extending through the day before the anniversary of the Initial Delivery Date.

"**Costs**" has the meaning set forth in Section 11.3(f)(iii).

"**CPRA**" has the meaning set forth in Section 12.21(b).

"**Curtailment Period**" means a period of time during the Delivery Term during which the generation of Facility Energy is required to be curtailed or reduced (in whole or part) as a result of an order, direction, alert, request, notice, instruction or directive from a Transmission Provider, the CAISO, WECC, NERC, or any other reliability entity due to (a) a System Emergency, (b) system improvements, curtailments, or scheduled and unscheduled repairs or maintenance at or downstream from the Point of Delivery, (c) an event of Force Majeure at or downstream from the Point of Delivery, (d) over-generation or any other reason adversely affecting the normal function and operation of the CAISO grid or a Transmission Provider's system, as may from time to time be identified by the CAISO, the Transmission Provider, WECC, NERC, or any other reliability entity. For the avoidance of doubt, the term "Curtailment Period" shall not include curtailments directed by CAISO for economic reasons as described in Section 6.5(b) or any curtailment by Buyer pursuant to Section 6.5(b).

"**Day-Ahead Market**" has the meaning set forth in the CAISO Tariff.

"**Deemed Generated Energy**" has the meaning set forth in Section 6.5(c).

"**Default**" has the meaning set forth in Section 11.1.

"**Defaulting Party**" has the meaning set forth in Section 11.1.

"**Delivery Term**" has the meaning set forth in Section 2.2(b).

"**Dispute**" has the meaning set forth in Section 12.3(a).

"**Dispute Notice**" has the meaning set forth in Section 12.3(a).

"**Early Termination Date**" has the meaning set forth in Section 11.3(a).

"**EEI**" means Edison Electric Institute.

"**Effective Date**" means the date on which Buyer and Seller have both executed this Agreement.

"**Electric Metering Devices**" means all meters, metering equipment, and data processing equipment used to measure, record, or transmit data relating to the Facility Energy. Electric Metering Devices include the metering current transformers and the metering voltage transformers.

"**Energy**" means electrical energy.

"**Environmental Attribute Reporting Rights**" means all rights to report ownership of the Environmental Attributes to any Person, including under Section 1605(b) of the Energy Policy Act of 1992, as amended from time to time or any successor statute, or any other current or future international, federal, state or local law, regulation or bill, or otherwise.

"**Environmental Attributes**" means RECs, and any and all other current or future credits, benefits, emissions reductions, offsets or allowances, howsoever entitled, named, registered, created, measured, allocated or validated (A) that are at any time recognized or deemed of value (or both) by Buyer, applicable law, or any voluntary or mandatory program of any other Governmental Authority or other Person and (B) that are attributable to (i) generation by the Facility during the Delivery Term or Replacement Energy required to be delivered by Seller to Buyer during the Delivery Term and (ii) the emissions or other environmental characteristics of such generation or such Replacement Energy or its displacement of conventional or other types of Energy generation. Environmental Attributes include any of the aforementioned arising out of legislation or regulation concerned with oxides of nitrogen, sulfur, carbon, or any other greenhouse gas or chemical compound, particulate matter, soot, or mercury, or implementing the United Nations Framework Convention on Climate Change (the "***UNFCCC***"), the Kyoto Protocol to the UNFCCC, California's greenhouse gas legislation (including RPS Law and California Assembly Bill 32 (Global Warming Solutions Act of 2006) and any regulations implemented pursuant to that act, including any compliance instruments accepted under the California Cap on Greenhouse Gas Emissions and Market-Based Compliance Mechanisms regulations of the California Air Resources Board or any successor regulations thereto) or any similar international, federal, state or local program or crediting "early action" with a view thereto, laws or regulations involving or administered by the CAMD and all Environmental Attribute Reporting Rights, including all evidences (if any) thereof such as renewable energy certificates of any kind. Environmental Attributes for purposes of this definition are separate from the Energy produced from the Facility and do not include (a) investment tax credits, any local, state or federal production tax credits, depreciation deductions or other tax credits providing a tax benefit to Seller or any other Person based on an ownership or security interest in the Facility, (b) any other depreciation deductions and benefits, and other tax benefits arising from ownership of the Facility and (c) cash grants or other financial incentives from any local, state or federal government available to Seller with respect to the Facility.

"**EPA**" means the United States Environmental Protection Agency.

"**EPS Compliance**" or "**EPS Compliant**" when used with respect to the Facility, means that the Facility satisfies both the PUC Performance Standard and the CEC Performance Standard in effect at the time; *provided,* if it is impossible for the Facility to satisfy both the PUC Performance Standard and the CEC Performance Standard in effect at any time, the Facility shall be deemed EPS Compliant if it satisfies the CEC Performance Standard in effect at the time and those portions of the PUC Performance Standard in effect at the time that it is possible for the Facility to satisfy while at the same time satisfying the CEC Performance Standard in effect at the time.

"**EPS Law**" means Sections 8340 and 8341 of the California Public Utilities Code or its successor or comparable state or federal programs.

"**Extended Delivery Term**" has the meaning set forth in Section 2.2(b).

"**Facility**" means the four (4) hydroelectric generating facilities described in the Recitals hereto, and Appendix B, including all property interests and related Interconnection Facilities owned by Seller.

"**Facility Energy**" means Energy generated by the Facility, less station load, transformation losses and transmission losses to the Point of Delivery, as measured by CAISO-approved Electric Metering Devices.

"**Facility Monthly Variable Output**" has the meaning set forth in Appendix A.

"**FERC**" means the Federal Energy Regulatory Commission.

"**Fixed Monthly Payment**" has the meaning set forth in Appendix A.

"**Force Majeure**" has the meaning set forth in Section 12.6(b).

"**Force Majeure Notice**" has the meaning set forth in Section 12.6(a).

"**Forced Outage**" means the removal of service availability of the Facility, or any portion of the Facility, for emergency reasons or conditions in which the Facility, or any portion thereof, is unavailable due to unanticipated failure, including as a result of Force Majeure.

"**Full Capacity Deliverability Status**" or "**FCDS**" has the meaning set forth in the CAISO Tariff.

"**GAAP**" means generally accepted accounting principles set forth in opinions and pronouncements of the Accounting Principles Board of the American Institute of Certified Public Accountants and statements and pronouncements of the Financial Accounting Standards Board or in such other statements by such other entity as may be approved by a significant segment of the accounting profession, in each case as the same are applicable to the circumstances as of the date of determination.

"**Gains**" has the meaning set forth in Section 11.3(f)(i).

"**Governmental Authority**" means any federal, state, regional, city or local government, any intergovernmental association or political subdivision thereof, or other governmental, regulatory or administrative agency, court, commission, administration, department, board, or other governmental subdivision, legislature, rulemaking board, tribunal, or other governmental authority with jurisdiction over the Parties, the Facility, or this Agreement, or any Person acting as a delegate or agent of any Governmental Authority; provided that "Governmental Authority" specifically excludes Buyer, any successor or assignee of Buyer and the Participating Members.

"**Gross Facility Energy**" means the amount of Facility Energy delivered to the Point of Delivery during a Buyer Curtailment plus the amount of MWh calculated to approximate the amount of Energy that could have been produced and delivered to the Point of Delivery during the Buyer Curtailment, based on the volume of water bypassed at the Facility during a Buyer Curtailment. For the avoidance of doubt, volumes of water bypassed at the Facility for any reason other than a Buyer Curtailment, including natural spill conditions that may occur, shall not be included in the calculation of Gross Facility Energy.

"**IEEE**" means the Institute of Electrical and Electronics Engineers.

"**Insurance**" means the policies of insurance as set forth in Appendix E.

"**Interest Rate**" has the meaning set forth in Section 9.3.

"**Initial Delivery Date**" means December 19, 2021 and is the first day of the Delivery Term.

"**Initial Delivery Term**" has the meaning set forth in Section 2.2(b).

"**ISA**" means the Instrument Society of America.

"**Interconnection Agreement**" means the interconnection agreement entered into by Seller pursuant to which the Facility will be interconnected with the Transmission System, and pursuant to which Seller's Interconnection Facilities and any other Interconnection Facilities will be constructed, operated and maintained during the Delivery Term.

"**Interconnection Facilities**" means the interconnection facilities, control and protective devices and metering facilities required to connect the Facility with the Transmission System in accordance with the Interconnection Agreement.

"**Licensed Professional Engineer**" means an independent, professional engineer reasonably acceptable to Buyer, licensed in the State of California, and otherwise qualified to perform the work required hereunder.

"**Lien**" means any mortgage, deed of trust, lien, security interest, retention of title or lease for security purposes, pledge, charge, encumbrance, equity, attachment, claim, easement, right of way, covenant, condition or restriction, leasehold interest, purchase right or other right of any kind, including any option, of any other Person in or with respect to any real or personal property.

"**Local Capacity Requirement Attributes**" means the benefits or attributes now or existing in the future based on the procurement obligations of Buyer with respect to local resource capacity requirements as prescribed by the PUC, the CAISO or other regional entity, and that are associated with the electric generating capability of the Facility.

"**Locational Marginal Price**" or "**LMP**" has the meaning set forth in the CAISO Tariff.

"**Losses**" has the meaning set forth in Section 11.3(f)(ii).

"**Major Maintenance Blockout**" has the meaning set forth in Section 3.5(a).

"**Month**" means a calendar month commencing at 00:00 Pacific Prevailing Time on the first day of such month and ending at 24:00 Pacific Prevailing Time on the last day of such month.

"**Monthly Base Output**" has the meaning set forth in Appendix A.

"**MW**" means megawatt in alternating current, or ac.

"**MWh**" means megawatt-hours.

"**NERC**" means the North American Electric Reliability Corporation.

"Net Qualifying Capacity" has the meaning set forth in the CAISO Tariff; provided, however, the amount of Net Qualifying Capacity provided by the Facility shall be equal to the amount of Resource Adequacy Capacity that is eligible to be used by Buyer to satisfy Compliance Showing requirements, including adjustments to account for Facility availability, operational limitations and Scheduled Outages.

"**Non-Defaulting Party**" has the meaning set forth in Section 11.3(a).

"**Non-Availability Charge**" has the meaning set forth in the CAISO Tariff.

"**Notice of Termination**" has the meaning set forth in Section 2.2(c).

"**Notifying Party**" has the meaning set forth in Section 12.3(a).

"**OSHA**" means the Occupational Safety and Health Administration of the United States Department of Labor.

"**Pacific Prevailing Time**" means the local time in the State of California.

"**Participating Members**" means **RESERVED; LIST OF NCPA MEMBERS TO BE INCLUDED PRIOR TO FINAL EXECUTION**.

"**Party**" or "**Parties**" has the meaning set forth in the preamble of this Agreement.

"**Permits**" means all applications, permits, licenses, franchises, certificates, concessions, consents, authorizations, certifications, self-certifications, approvals, registrations, orders, filings, entitlements and similar requirements of whatever kind and however described that are required to be filed, submitted, obtained or maintained by any Person with respect to the development, siting, design, acquisition, construction, equipping, financing, ownership, possession, shakedown, start-up, testing, operation or maintenance of the Facility, the production, sale and delivery of Products from the Facility, including Facility Energy, Capacity Rights and Environmental Attributes, or any other transactions or matter contemplated by this Agreement (including those pertaining to electrical, building, zoning, environmental and occupational safety and health requirements), including the, Conditional Use Permit, CEQA determinations and the Permits as may be applicable.

"**Person**" means any individual, corporation, partnership, joint venture, limited liability company, association, joint stock company, trust, unincorporated organization, entity, government or other political subdivision.

"**PNode**" means the CAISO Pricing Node for the Facility as defined in the CAISO Tariff to be established by CAISO, as set forth in Appendix B.

"**Point of Delivery**" mean the Point of Interconnection for each Facility.

"**Point of Interconnection**" has the meaning set forth in Appendix B.

"**Present Value Rate**" means, at any date, the sum of 0.50% plus the yield reported on page "USD" of the Bloomberg Financial Markets Services Screen (or, if not available, any other nationally-recognized trading screen reporting on-line intraday trading in United States government securities) at 11:00 a.m. (New York City, New York time) for the United States government securities having a maturity that most nearly matches the Remaining Term at that date.

"**Products**" means any and all Facility Energy, Capacity Rights, Environmental Attributes, and ancillary products, services or attributes similar to the foregoing that are or can be produced by, or are associated with, the Facility, whether now attainable or established in the future, including delivered energy, renewable attributes, operating reserves and renewable energy credits.

"**Prudent Utility Practices**" means those practices, methods, and acts, that are commonly used by a significant portion of the hydroelectric electric generation industry in prudent engineering and operations to design, construct, and operate and maintain electric equipment lawfully and with safety, dependability, reliability, efficiency, and economy, including any applicable practices, methods, acts, guidelines, standards and criteria of the CAISO, FERC, NERC, WECC, as each may be amended from time to time, and all applicable Requirements of Law. Prudent Utility Practices are not intended to be limited to the optimum practice, method, or act, to

the exclusion of all others, but rather is intended to include acceptable practices, methods, and acts generally accepted in the hydroelectric generation industry.

"**Public Utilities Code**" means the Public Utilities Code of the State of California, as may be amended from time to time.

"**PUC**" means the California Public Utilities Commission and any successor thereto.

"**PUC Performance Standard**" means, at any time, the greenhouse gas emission performance standard in effect at such time for electric generation facilities owned or operated (or both) by load-serving entities and not local publicly-owned electric utilities, or for which a load-serving entity and not a local publicly owned electric utility has entered into a contractual agreement for the purchase of power from such facilities, as established by the PUC or other Governmental Authority under the EPS Law.

"**QRE**" has the meaning set forth in Section 7.4.

"**RA Capacity Monthly Payment**" has the meaning set forth in Appendix A.

"**RA Capacity Rate**" has the meaning set forth in Appendix A.

"RA Deficiency Amount" means the liquidated damages payment that Seller shall pay to Buyer for an applicable RA Shortfall Month as calculated in accordance with Section 8.4.

"RA Shortfall Month" means, for purpose of calculating an RA Deficiency Amount under Section 8.4, any month which the amount of Resource Adequacy Capacity supplied from the Facility for such month was less than the Net Qualifying Capacity for such month.

"**Real-Time Market**" has the meaning set forth in the CAISO Tariff.

"**REC**" or "**Renewable Energy Credit**" means a certificate of proof associated with the generation of electricity from an eligible renewable energy resource, which certificate is issued through the accounting system established, used or approved by the CEC pursuant to the RPS Law, evidencing that one (1) MWh of Energy was generated and delivered from such eligible renewable energy resource. Such certificate is a tradable environmental commodity (also known as a "green tag" or "renewable energy certificate") for which the owner of the REC can evidence that it has purchased Energy that is CEC Certified.

"**Recipient Party**" has the meaning set forth in Section 12.3(a).

"**Remaining Term**" means, at any date, the remaining portion of the Delivery Term at that date without regard to any early termination of this Agreement.

"**Replacement RA**" has the meaning set forth in Section 8.4(c).

"**Requirements**" means, collectively, (a) any standards or requirements of ASTM, ASME, AWS, EPA, EEI, IEEE, ISA, National Electrical Code, NERC, National Electric Safety Code, OSHA, Cal-OSHA, Uniform Building Code, or Uniform Plumbing Code applicable to the design or construction of the Facility, (b) any applicable local county fire department standards or codes, (c) Prudent Utility Practices, (d) FERC licenses, and federal and state dam safety regulations, (e) all applicable Requirements of Law, including the UCC, and (f) all other requirements of this Agreement.

"**Requirement of Law**" means any federal, state, local or other law (including any environmental law, EPS Law or RPS Law), resolution, standard, code, rule, ordinance, directive, regulation, order, judgment, decree, ruling, determination, permit, certificate, authorization, license or approval of a Governmental Authority, including those pertaining to electrical, building, zoning, environmental, dam safety, cyber and physical security, and occupational safety and health requirements.

"**Resource Adequacy Attributes**" of "**Resource Adequacy Capacity**" means the benefits or attributes, including flexible attributes, if any, now or existing in the future based on the procurement obligations of Buyer with respect to Resource Adequacy as prescribed by the PUC, the CAISO or any other regional entity, and that are associated with the electric generating capability of the Facility.

"**RPS Compliance**" or "**RPS Compliant**" means, when used with respect to the Facility, that all Energy generated by such facility at all times shall, together with all of the associated Environmental Attributes, qualify as a "portfolio content category 1" eligible renewable resource, as such term is defined in Public Utilities Code Section 399.12 or Section 399.16, or equivalent if the RPS Law is changed, under the RPS Law.

"**RPS Law**" means the California Renewable Energy Resources Act, including the California Renewables Portfolio Standard Program, Article 16 of Chapter 2.3, Division 1 of the Public Utilities Code, California Public Resources Code § 25740 through 25751, any related regulations or guidebooks promulgated by the CEC or, as applicable, the PUC or its successor or equivalent state or federal programs.

"**SCADA**" means the supervisory control and data acquisition system for the Facility.

"**Schedule**" or "**Scheduling**" means the actions of Seller and Buyer, their Authorized Representatives, the Scheduling Coordinator and the Transmission Providers, if applicable, of notifying, requesting and confirming to the CAISO the amounts of Facility Energy expected to be delivered consistent with the Scheduling Interval at the Point of Delivery on any given date during the Delivery Term, all in the manner contemplated by the CAISO Tariff.

"**Scheduled Outage**" means any outage with respect to the Facility other than a Forced Outage.

"**Scheduled Outage Projection**" has the meaning set forth in Section 3.5(a).

"**Scheduling Coordinator**" has the meaning set forth in the CAISO Tariff.

"**Seller**" has the meaning set forth in the preamble of this Agreement.

"**Seller Indemnitees**" has the meaning set forth in Section 12.19(b).

"**Settlement Interval**" has the meaning set forth in the CAISO Tariff.

"**Settlement Statement**" has the meaning set forth in the CAISO Tariff.

"**Showing Month**" means the calendar month of the Delivery Period that is subject of the related Compliance Showing.

"**Subcontract**" means any agreement or contract entered into on or after the Effective Date by Seller and a Person other than Buyer, which Person is providing goods or services to Seller that are related to the performance of Seller's obligations under this Agreement. Subcontracts specifically include any agreement or contract that is referred to or defined as a "subcontract" in the policies, ordinances, codes or laws with which Seller must comply pursuant to this Agreement, or that is made with a "subcontractor" as such term is used or defined in such policies, ordinances, codes, or laws.

"**Subcontractor**" means any party to a Subcontract with Seller.

"**System Emergency**" means each of the following: (i) "System Emergency" as set forth in the CAISO Tariff and (ii) a condition or situation that in the judgment of Buyer (a) is imminently likely to endanger life or property; or (b) is imminently likely (as determined in a non-discriminatory manner) to cause a material adverse effect on the security of, reliability of, or damage to the Transmission System, Transmission Provider's interconnection facilities (as defined in the Interconnection Agreement) or the transmission systems of others to which the Transmission System is directly connected.

"**Tax**" or "**Taxes**" means each federal, state, county, local and other (a) net income, gross income, gross receipts, sales, use, ad valorem, business or occupation, transfer, franchise, profits, withholding, payroll, employment, excise, property or leasehold tax and (b) customs, duty or other fee, assessment or charge of any kind whatsoever, together with any interest and any penalties, additions to tax or additional amount with respect thereto.

"**Termination Notice**" has the meaning set forth in Section 11.3(a).

"**Termination Payment**" means a payment in an amount equal to the Non-Defaulting Party's (a) Losses, plus (b) Costs, minus (c) Gains; *provided*, *however*, that if such amount is a negative number, the Termination Payment shall be equal to zero.

"**Transmission Provider**" means the Person operating the Transmission System to and from the Point of Delivery.

"**Transmission Services**" means the transmission and other services required to transmit Facility Energy to or from the Point of Delivery.

"**Transmission System**" means the facilities utilized to provide Transmission Services.

"**Unexcused Cause**" has the meaning set forth in Section 12.6(b).

"**UNFCCC**" has the meaning set forth in the definition of "Environmental Attributes."

"**Variable Output**" has the meaning set forth in Appendix A.

"**Variable Output Monthly Payment**" has the meaning set forth in Appendix A.

"**Variable Output Rate**" has the meaning set forth in Appendix A.

"**Variable Output True-Up**" has the meaning set forth in Appendix A.

"**WECC**" means the Western Electricity Coordinating Council.

"**WREGIS**" means Western Renewable Energy Generation Information System.

"**WREGIS Certificates**" has the meaning set forth in Section 7.4.

"**WREGIS Operating Rules**" means the rules describing the operations of the WREGIS, as published by WREGIS.

Other terms defined herein have the meanings so given when used in this Agreement with initial-capitalized letters.

Section 1.2 Interpretation. In this Agreement, unless a clear contrary intention appears:

(a) time is of the essence;

(b) the singular number includes the plural number and vice versa;

(c) reference to any Person includes such Person's successors and assigns (regardless of whether such Person's successors and assigns are expressly referenced in the provision) but, in case of a Party hereto, only if such successors and assigns are permitted by this Agreement, and reference to a Person in a particular capacity excludes such Person in any other capacity or individually;

(d) reference to any gender includes the other;

(e) reference to any agreement (including this Agreement), document, act, statute, law, instrument, tariff or Requirement means such agreement, document, act, statute, law,

instrument, or tariff, or Requirement, as amended, modified, replaced or superseded and in effect from time to time in accordance with the terms thereof and, if applicable, the terms hereof, regardless of whether the reference to the agreement, document, act, statute, law, instrument, tariff, or Requirement expressly refers to amendments, modifications, replacements, or successors;

(f) reference to any Article, Section, or Appendix means such Article of this Agreement, Section of this Agreement, or such Appendix to this Agreement, as the case may be, and references in any Article or Section or definition to any clause means such clause of such Article or Section or definition;

(g) "hereunder," "hereof," "hereto" and words of similar import shall be deemed references to this Agreement as a whole and not to any particular Article or Section or other provision hereof or thereof;

(h) "including" (and with correlative meaning "include") means including without limiting the generality of any description preceding such term, regardless of whether words such as "without limitation" are expressly included in the applicable provision;

(i) relative to the determination of any period of time, "from" means "from and including," "to" means "to but excluding" and "through" means "through and including";

(j) unless otherwise indicated, reference to time shall always refer to Pacific Prevailing Time; and reference to any "day" shall mean a calendar day, unless otherwise indicated; and

(k) the term "or" is not exclusive, regardless of whether "and/or" is used in the applicable provision.

ARTICLE II
EFFECTIVE DATE, TERM, AND EARLY TERMINATION

Section 2.1 Effective Date. This Agreement is effective as of the Effective Date. On or prior to the Effective Date, each of the following has occurred: (a) both Parties have executed and delivered this Agreement; (b) Buyer has received copies of all requisite resolutions and incumbency certificates of Seller and any other documents evidencing all actions taken by Seller to authorize the execution and delivery of this Agreement, such resolutions to be certified as of the Effective Date by an authorized representative of Seller; and (b) Seller has received copies of all requisite resolutions and incumbency certificates of Buyer authorizing the execution and delivery of this Agreement, such resolutions to be certified as of the Effective Date by an authorized official of Buyer.

Section 2.2 Term.

(a) **Agreement Term.** The term of this Agreement (the "***Agreement Term***") shall commence on the Effective Date and end on the last day of the Delivery Term, or upon the earlier termination of this Agreement in accordance with the terms hereof.

(b) **Delivery Term.** The initial delivery term of this Agreement (the "**Initial Delivery Term**") shall begin on the Initial Delivery Date and shall continue uninterrupted through 11:59 pm on December 31, 2031, unless sooner terminated in accordance with the terms of this Agreement. At the end of the Initial Delivery Term of this Agreement, the term of this Agreement shall automatically extend for an additional ten (10) year period (the "**Extended Delivery Term**") unless Seller provides written Notice of Termination pursuant to Section 2.2(c), of its election to not automatically extend the term of this Agreement.

(c) **Notice of Termination.** This Agreement may be terminated by Seller at the end of the Initial Delivery Term by providing written notice to the Buyer at least three hundred sixty five (365) Calendar Days prior to the end of the Initial Delivery Term of this Agreement ("**Notice of Termination**").

Section 2.3 Survivability. The provisions of this ARTICLE II, ARTICLE X, ARTICLE XI, Section 12.9 and Section 12.21 shall survive for a period of one year following the termination of this Agreement. The provisions of ARTICLE IX shall survive for a period of four (4) years following final payment made by Buyer hereunder or the expiration or termination date of this Agreement, whichever is later. The provisions of ARTICLE V, ARTICLE VII, and ARTICLE VIII shall continue in effect after termination to the extent necessary to provide for final billing, adjustments, and deliveries related to any period prior to termination of this Agreement.

Section 2.4 Early Termination.

(a) **Early Termination by Mutual Agreement.** This Agreement may be terminated by mutual written agreement of the Parties.

(b) **Early Termination for Default.** Upon the occurrence of a Default, the Non-Defaulting Party may terminate this Agreement as set forth in Section 11.3.

(c) **Early Termination for Force Majeure.** This Agreement may be terminated pursuant to Section 12.6(c).

(d) **Effect of Termination.** Except as otherwise provided herein, any early termination of this Agreement under this Section 2.4 shall be without prejudice to the rights and remedies of a Party for Defaults occurring prior to such termination.

ARTICLE III
OPERATION AND MAINTENANCE OF THE FACILITY

Section 3.1 General Operational Requirements. Seller shall, at all times:

(a) At its sole expense, operate and maintain the Facility (i) in accordance with the Requirements and (ii) in a manner that is reasonably likely to result in a useful life for the Facility of not less than the Delivery Term;

(b) Use qualified and trained personnel for managing, operating and maintaining the Facility and for coordinating with Buyer, and ensure that necessary personnel are available on-site or on-call twenty-four (24) hours per day during the Delivery Term;

(c) Operate and maintain the Facility with due regard for the safety, security and reliability of the Interconnection Facilities; and

(d) Operate and maintain the Facility in accordance with the CAISO Tariff and other applicable requirements, including, but not limited to, submitting Facility technical and modeling information to the CAISO, as may be required; and

(e) Comply with operating and maintenance standards recommended or required by the Facility's equipment suppliers, and in accordance with Prudent Utility Practices.

Section 3.2 Operation and Maintenance Plan.

(a) Seller shall devise and implement a plan of inspection, maintenance, and repair for the Facility and the components thereof in order to maintain such equipment in accordance with Prudent Utility Practices, and shall keep records with respect to inspections, maintenance, and repairs thereto. The aforementioned plan and all records of such activities shall be available for inspection by Buyer during Seller's regular business hours upon reasonable notice.

(b) In addition to the other required and preventative maintenance actions required by this Agreement, Seller shall: (i) conduct regular visual equipment inspections and log significant parameters; (ii) identify and perform all preventative maintenance requirements for the following calendar year; (iii) schedule and assign routine maintenance during operations, planned outages, as well as maintenance that can be conducted in parallel; (iv) conduct periodic maintenance to various equipment; (v) conduct periodic quality assurance and quality control activities and inspections; and (vi) hire Subcontractors, as applicable to meet the Facility's maintenance, betterment, and improvement needs. Notwithstanding the requirements of this Section 3.2(b), Seller shall retain full discretion in budgeting and determining the priority in which it performs preventive maintenance in relation to Seller's other projects and actions.

Section 3.3 Decommissioning and Other Costs. Buyer shall not be responsible for any cost of decommissioning or demolition of the Facility or any environmental or other liability associated with the decommissioning or demolition of the Facility without regard to the timing or cause of the decommissioning or demolition.

Section 3.4 Environmental Credits. Seller shall, if applicable, obtain in its own name and at its own expense all pollution or environmental credits or offsets necessary to operate the Facility in compliance with any Requirement of Law; *provided* for the avoidance of doubt, Seller shall not use any Environmental Attributes to satisfy the foregoing obligation.

Section 3.5 Outages.

(a) Buyer and Seller shall cooperate to minimize Scheduled Outages during specified periods of time during each calendar year in accordance with Prudent Utility Practices and this Section 3.5 (such periods, the "***Major Maintenance Blockout***"). No later than May 1 prior the commencement of each Contract Year, Buyer shall provide Seller with its specified Major Maintenance Blockout. In the absence of such updated notification, the period of May 1 through September 30 shall apply. Seller shall attempt to minimize its Scheduled Outages during the Major Maintenance Blockout consistent with Prudent Utility Practices. No later than ninety (90) days prior to the first day of the Delivery Period, and for each calendar year thereafter, no later than four (4) months prior to the deadline for providing the CAISO Resource Adequacy filings and proposed maintenance outages for the following year as described in the CAISO Tariff, Seller shall provide Buyer and the Scheduling Coordinator with its non-binding written projection of all Scheduled Outages for the succeeding calendar year (the "***Scheduled Outage Projection***") reflecting Seller's attempt to minimize scheduled maintenance during the Major Maintenance Blockout. In addition, Seller shall cooperate in good faith with maintenance scheduling requests by Buyer consistent with Prudent Utility Practices, and Buyer and Seller shall strive to develop a final Scheduled Outage plan no later than three (3) months prior to the deadline for providing the CAISO Resource Adequacy filings and proposed maintenance outages for the following year as described in the CAISO Tariff. Notwithstanding the process described herein for coordination of Scheduled Outages between Buyer and Seller, both Buyer and Seller acknowledge that all Scheduled Outages submitted to the CAISO may be accepted or rejected by the CAISO as described in the CAISO Tariff. In the event the CAISO rejects a Scheduled Outage request submitted by Seller, Buyer and Seller agree to cooperate in good faith to timely coordinate and develop a revised final Scheduled Outage plan to account for any Scheduled Outages that are not approved by the CAISO. The Scheduled Outage Projection shall include information concerning all projected Scheduled Outages during such period, including (a) the anticipated start and end dates of each Scheduled Outage; (b) a description of the maintenance or repair work to be performed during the Scheduled Outage; and (c) the anticipated MW of operational capacity, if any, during the Scheduled Outage. Seller shall use commercially reasonable efforts to notify Buyer and its Scheduling Coordinator of any change in the Scheduled Outage Projection sixty-five (65) days prior to first day of the month of the originally-scheduled date of the Scheduled Outage but in no event shall Seller notify Buyer later than fifty-five (55) days prior to the first day of the month of the originally-scheduled date of the Scheduled Outage. Seller shall use commercially reasonable efforts to accommodate reasonable requests of Buyer with respect to the timing of Scheduled Outages and shall, to the extent feasible and consistent with Prudent Utility Practices, arrange for Scheduled Outages to occur between October 1 and May 1 of each year (or such other period as reasonably determined by Buyer from time to time) and coincident, to the extent known by Seller, with the Transmission Provider's planned transmission outages, but not to overlap with the Major Maintenance Blackout. In the event of a System Emergency, Seller shall consider and decide in its discretion if it is commercially reasonable to reschedule any Scheduled Outages previously scheduled so that it does not occurs during the System Emergency. In addition, Seller shall use commercially reasonable efforts to coordinate Scheduled Outages with a total duration of 30 calendar days or less to occur within a single calendar month period.

(b) In addition to reporting outages to Buyer and the Scheduling Coordinator within any applicable time period for reporting outages under the CAISO Tariff and applicable rules and regulations of the CAISO, immediately upon identification of a situation likely to result

in a Forced Outage occurring within a twenty-four (24) hour period that is likely to cause or require removal of the Facility from service, or a reduction in the maximum output capability of the Facility by one (1) MW or more from the value most recently recorded in the generation outage reporting system for the CAISO, Seller shall notify Buyer and the Scheduling Coordinator. For all other Forced Outages, Seller shall provide Buyer and the Scheduling Coordinator with as much advance notice as practicably possible, but in all cases, shall notify Buyer and the Scheduling Coordinator within 30 minutes after the commencement of the Forced Outage. Seller shall provide detailed information concerning each Forced Outage, including (i) the start and anticipated end dates of the Forced Outage; (ii) a description of the cause of the Forced Outage; (iii) a description of the maintenance or repair work to be performed during the Forced Outage; and (iv) the anticipated MW of operational capacity, if any, during the Forced Outage. Seller shall take all reasonable measures and exercise commercially reasonable efforts to avoid Forced Outages and to limit the duration and extent of any such outages.

(c) In addition to the requirements set forth in Section 3.5(a) and Section 3.5(b), the Parties shall cooperate to develop mutually acceptable procedures for addressing Scheduled Outages and any other outages arising in connection with the Facility.

(d) In the event of any inconsistency between the provisions in this Section 3.5 and any applicable requirements of CAISO, the provisions of CAISO shall govern.

ARTICLE IV
COMPLIANCE DURING OPERATIONS

Section 4.1 Buyers' Rights to Monitor in General. Buyer shall have the right, and Seller shall permit Buyer and its Authorized Representative, and any other advisors, engineers and consultants agreed by the Parties (where such agreement shall not be unreasonably withheld), to observe, inspect, and monitor the operations and activities of the Facility; provided that such activities on the part of Buyer and its Authorized Representative shall be coordinated with Seller so as to not interfere with the Facility, and as to other advisors, engineers and consultants, such third parties executing an agreement setting forth the terms and conditions required by the Parties, including insurance, indemnity and non-disclosure terms. Seller shall cause its personnel, consultants, and contractors to be available to, and cooperate in all reasonable respects with, Buyer and its Authorized Representative, advisors, engineers, and consultants at reasonable times and with prior notice for purposes of discussing any aspect of the Facility testing, performance, operation, or maintenance thereof and Buyer's exercise of its rights under this Section 4.1. Buyer's rights to access the Facility shall be subject to Seller's reasonable safety protocols.

Section 4.2 Effect of Review by Buyer. Any review by Buyer or a Buyer's Authorized Representative of the operation or maintenance of the Facility, or observation of any testing, is solely for the information of Buyer. Buyer shall have no obligation to share the results of any such review or observations with Seller, nor shall any such review or the results thereof (whether or not the results are shared with Seller), nor any failure to conduct any such review, nor any observation of testing or failure to observe testing, relieve Seller from any of its obligations under this Agreement. By making any such review or observing any such testing, Buyer makes no representation as to the economic and technical feasibility, operational capability or reliability of

the Facility. Seller shall in no way represent to any third party that any such review by Buyer or Buyer's Authorized Representative of the Facility thereof, including any review of the operation or maintenance, is a representation by Buyer as to the economic and technical feasibility, operational capability or reliability of the Facility. Seller is solely responsible for the economic and technical feasibility, operational capability and reliability thereof.

Section 4.3 No Liens. Except as otherwise permitted by this Agreement: (a) the Facility shall be owned by Seller during the Agreement Term; and (b) Seller shall not sell or otherwise dispose of or create, incur, assume or permit to exist any Lien on any portion of the Facility or any other property or assets that are related to the operation, maintenance and use of the Facility without the prior written approval of Buyer, which such written approval shall not be unreasonably withheld.

ARTICLE V
PURCHASE AND SALE OF PRODUCT

Section 5.1 Purchases by Buyer. Subject to the terms and conditions of this Agreement, during the Delivery Term, Buyer will purchase and receive all the Products produced by or associated with the Facility at the Contract Price and in accordance with Appendix A, and Seller shall supply and deliver to Buyer all the Products produced by or associated with the Facility. At its sole discretion, Buyer may during the Delivery Term re-sell or use for another purpose all or a portion of the Products, provided that no such re-sale or use shall relieve Buyer of any obligations hereunder. During the Delivery Term, Buyer will have exclusive rights to offer, bid, or otherwise submit the Product from the Facility after the Point of Delivery for resale in the market or to any third party, and retain and receive any and all related revenues. Buyer has no obligation to purchase from Seller any Products for which the associated Facility Energy is not or cannot be delivered to the Point of Delivery as a result of an outage of the Facility, a Force Majeure Event, or a Curtailment Period.

Section 5.2 Sale of Environmental Attributes. During the Delivery Term, Seller shall sell and deliver to Buyer, and Buyer shall purchase and receive from Seller, all Environmental Attributes attributable to the Facility Energy generated by the Facility.

ARTICLE VI
TRANSMISSION AND SCHEDULING; TITLE AND RISK OF LOSS

Section 6.1 Delivery.

(a) Energy and Capacity. Subject to the provisions of this Agreement, during the Delivery Term, Seller shall supply and deliver the Products to Buyer at the Point of Delivery, and Buyer shall take delivery of the Products at the Point of Delivery in accordance with the terms of this Agreement. Seller will be responsible for paying or satisfying when due any costs or charges imposed in connection with the delivery of Facility Energy to the Point of Delivery, including without limitation, Station Use, Electrical Losses, and any operation and maintenance charges imposed on Seller by the Transmission Provider directly relating to the Facility's operations. Buyer shall be responsible for all costs, charges and penalties, if any, imposed in connection with

the delivery of Facility Energy at and after the Point of Delivery, including without limitation transmission costs and transmission line losses. Throughout the Delivery Term, Buyer shall Schedule and dispatch the Facilities in accordance with Prudent Utility Practices and shall have the exclusive right to bid or schedule all Products from each Facility, and provide (or cause to be provided), at its own expense, and will be solely responsible for the performance of all Scheduling Coordinator services required under the term of this Agreement, the CAISO Tariff, applicable protocols and scheduling practices, and any other applicable law, rule or regulatory requirement applicable to Scheduling Coordinators, for the Facilities. The Facility Energy will be scheduled and dispatched with the CAISO by Buyer (or Buyer's designated Scheduling Coordinator for the Facility) in accordance with Appendix C.

(b) Environmental Attributes. All Environmental Attributes associated with the Facility during the Delivery Term are exclusively dedicated to and will be conveyed to Buyer. Seller represents and warrants that Seller holds the rights to all Environmental Attributes from the Facility, and Seller agrees to convey and hereby conveys all such Environmental Attributes to Buyer as included in the delivery of the Product from the Facility.

Section 6.2 Scheduling Coordinator; CAISO Cost Allocation. Buyer or Buyer's designee shall act as Scheduling Coordinator for the Facility and shall have the full right and obligation to Schedule and dispatch all Facility Energy and capacity in accordance with the CAISO Tariff and other applicable requirements. Seller shall provide the capability to implement dispatch order, including adjustments to operating constraints, such as ramp rates, megawatt output, and megavar output, in real-time by means of set points received by the SCADA system or Facility controller of Seller, provided that the dispatch order is consistent with the Facility's operational characteristics as then-currently modeled in the CAISO Master File. The Facility shall have one or more designed resource IDs with CAISO for scheduling purposes, as set forth in the CAISO Master File. Buyer shall be financially responsible for and shall pay for all CAISO Costs; provided however, that notwithstanding the foregoing, Seller shall assume all liability and reimburse Buyer for any and all costs or charges under a Settlement Statement incurred by Buyer because of Seller's failure to perform any covenant or obligation set forth in this Agreement.

Section 6.3 Interconnection Facilities. Seller shall maintain an Interconnection Agreement and applicable Interconnection Facilities with the Transmission Provider to enable the Facility to interconnect with the Transmission System at the Point of Delivery. Seller shall be solely responsible for and pay all costs and charges arising under the Interconnection Agreement in compliance with the Interconnection Agreement and applicable rules and requirements in place throughout the Delivery Term.

Section 6.4 Forecasting. Seller shall provide the forecasts described below at its sole expense and in a format reasonably acceptable to Buyer (or Buyer's designee). Seller shall use reasonable efforts to provide forecasts that are accurate and, to the extent not inconsistent with the requirements of this Agreement, shall prepare such forecasts, or cause such forecasts to be prepared, in accordance with Prudent Operating Practices.

(a) Annual Forecast of Energy. No less than forty-five (45) days before (i) the first day of the first Contract Year of the Delivery Term and (ii) at the beginning of each calendar

year for every subsequent Contract Year during the Delivery Term, Seller shall provide to Buyer a non-binding forecast of each month's average-day expected Facility Energy, and associated hydrological storage, for the following calendar year in a form reasonably requested by Buyer.

(b) Monthly Forecast of Energy and Available Generating Capacity. No less than thirty (30) days before the Initial Delivery Date, and thereafter ten (10) Business Days before the beginning of each month during the Delivery Term, Seller shall provide to Buyer a non-binding forecast of the hourly expected Facility Energy, hydrological storage, and Available Generating Capacity for each day of the following month in a form reasonably requested by Buyer ("**Monthly Delivery Forecast**").

(c) Day-Ahead Forecast. By 5:30 AM Pacific Prevailing Time on the Business Day immediately preceding the date of delivery, or as otherwise specified by Buyer consistent with Prudent Operating Practice, Seller shall provide Buyer with a non-binding forecast of (i) Available Generating Capacity and (ii) environmental requirements, including minimum water release requirements, in each case, for each hour of the immediately succeeding day ("**Day-Ahead Forecast**"). A Day-Ahead Forecast provided in a day prior to any non-Business Day(s) shall include non-binding forecasts for the immediate day, each succeeding non-Business Day and the next Business Day. Each Day-Ahead Forecast shall clearly identify, for each hour, Seller's non-binding best estimate of (i) the Available Generating Capacity and (ii) applicable requirements and minimum water release requirements.

(d) Throughout the Delivery Term, Seller shall provide to Buyer and the Scheduling Coordinator the following data on a real-time basis, and in a format that reasonably allows Buyer and the Scheduling Coordinator to copy, paste or otherwise use such data:

(i) Read-only and/or write access via secure login credentials to Energy output information and operational information collected by the SCADA system for the Facility; *provided* that if Buyer or the Scheduling Coordinator is unable to access the Facility's SCADA system, then upon written request from Buyer or the Scheduling Coordinator, Seller shall provide Energy output information and operational information through such other format as may be mutually acceptable to Seller and Buyer, all as may be updated from time to time based on advancements in technology in accordance with Prudent Utility Practices; and

(ii) Read-only access to all Electric Metering Devices.

(e) Seller, Buyer and the Scheduling Coordinator shall mutually develop forecasting and Scheduling procedures in addition to those set forth in this Section 6.4 and Appendix C, in order to administer the provisions of this Agreement in compliance with all applicable Requirements and requirements of the Transmission Provider, CAISO, NERC, WECC, and any balancing authority involved in the Scheduling of Energy and capacity under this Agreement. Seller, Buyer and the Scheduling Coordinator shall promptly cooperate to make any reasonably necessary and appropriate modifications to such forecasting or Scheduling procedures as may be required from time to time.

Section 6.5 Curtailment.

(a) Seller shall reduce deliveries of Facility Energy to the Point of Delivery as soon a reasonably possible upon notice from the Scheduling Coordinator, the CAISO, a Transmission Provider, or any balancing authority or reliability entity during Curtailment Periods. Buyer shall be excused from receiving any Facility Energy from Seller and shall not be obligated to pay Seller for the amount of reduced Facility Energy arising during a Curtailment Period. If required by the Scheduling Coordinator, the CAISO, a Transmission Provider, any balancing authority or reliability entity, or if requested by Buyer, Seller shall provide the dispatch and operating capability to implement curtailments and adjust ramp rates, megawatt output, and (if applicable) megavar output in real-time by means of setpoints received by the SCADA system or Facility controller of Seller.

(b) Separate from the curtailments described in Section 6.5(a), Buyer may, upon delivering curtailment instruction to Seller, curtail deliveries of Facility Energy at any time and for the duration specified by Buyer ("**Buyer Curtailment**"). For the avoidance of doubt, if the curtailment is resulting from Buyer's bidding and scheduling strategies and activities, including Buyer's strategies to minimize Buyer's exposure to negative pricing, the Facility will be deemed to have been curtailed pursuant to this Section 6.5(b), for which Buyer will be required to reimburse Seller as set forth herein. Buyer, Buyer's real-time operators or the Scheduling Coordinator shall provide to Seller a dispatch notice or instruction in accordance with CAISO scheduling timelines set forth in the CAISO Tariff, or in accordance with the Scheduling and dispatch procedures set forth in Appendix C, of its request for curtailment under this Section 6.5(b), and Seller shall comply with such request in accordance with Prudent Utility Practices, provided that the dispatch order is consistent with the Facility's operational characteristics as then-currently modeled in the CAISO Master File. The curtailment notice to Seller shall indicate the amount of any Facility Energy to be produced in each applicable Settlement Interval. Seller shall respond to curtailment notices (including the end of such curtailment periods) in accordance with Prudent Utility Practices. Seller shall provide the capability to implement curtailment notices, including adjustments to operating constraints, such as ramp rates, megawatt output, and megavar output, in real-time by means of set points received by the SCADA system or Facility controller of Seller. Buyer shall compensate Seller for any Deemed Generated Energy by accounted for Deemed Generated Energy as Monthly Base Output, as further set forth in Appendix A.

(c) "***Deemed Generated Energy***" means the amount of Facility Energy, expressed in MWh, that the Facility would have produced and delivered to the Point of Delivery, but for a curtailment event arising under Section 6.5(b), which amount shall be equal to (i) Gross Facility Energy, less (ii) the amount of Facility Energy delivered to the Point of Delivery during the curtailment or other event, if any; *provided* that, if the applicable difference calculated pursuant to the formula provided above is negative, the Deemed Generated Energy shall be zero (0).

(d) Within thirty (30) days after any curtailment pursuant to Section 6.5(a) and Section 6.5(b), Buyer shall provide Seller with all necessary information needed and reasonably requested by Seller, whether from Buyer or CAISO, including CAISO "flags" with respect to the curtailments, for Seller to determine if compensation is owed to Seller by Buyer pursuant to Section 6.5(b).

Section 6.6 No Payment. Buyer shall not be obligated to pay Seller for any Facility Energy that is not or cannot be delivered to the Point of Delivery for any reason (including Force Majeure), except as otherwise stated in Section 6.5(b).

Section 6.7 Title; Risk of Loss. As between the Parties, Seller shall be deemed to be in exclusive control (and responsible for any damages or injury caused thereby) of all Energy prior to the Point of Delivery, and Buyer shall be deemed to be in exclusive control (and responsible for any damages or injury caused thereby), of the Energy at and from the Point of Delivery. Seller warrants that it will deliver all Products, including all of the associated Environmental Attributes, to Buyer free and clear of all Liens created by any Person other than Buyer.

Section 6.8 RPS and EPS Compliance.

(a) Seller warrants and guarantees that during the Delivery Period the Facility Energy produced by each Facility that is CEC Certified as of the Effective Date, and at all times thereafter until the expiration or earlier termination of the Agreement, the Facility (including the Facility Energy and the associated Environmental Attributes) shall be both RPS Compliant and EPS Compliant (if EPS Law is applicable to the Facility), except if the Facility fails to be RPS Compliant or EPS Compliant (if EPS Law is applicable to the Facility) as a result of (i) a Change in Law making it impossible, after the use of commercially reasonable efforts as required under Section 6.8(b), for the Facility to be RPS Compliant or EPS Complaint, or (ii) any repeal of the RPS Law or EPS Law.

(b) If a Change in Law occurs after the Initial Delivery Date that (i) does not repeal the RPS Law or the EPS Law, (ii) causes the Facility to cease to be RPS Compliant and/or EPS Compliant and (iii) reduces the value to Buyer of the Environmental Attributes, then Seller shall use commercially reasonable efforts to comply with such Change in Law and cause the Facility to be RPS Compliant and EPS Compliant. To the extent a Change in Law occurs after the execution of this Agreement that causes this representation and warranty to be materially false or misleading, it shall not be an Event of Default if Seller has used commercially reasonable efforts to comply with such Change in Law. The term "commercially reasonable efforts" as used in this Section 6.8 means efforts consistent with the subject to Section 6.9.

(c) Subject to Section 7.1, Seller shall also take all other reasonable actions necessary to ensure that the Facility Energy is tracked for purposes of satisfying the RPS Law, as may be amended or supplemented by the PUC or CEC from time to time.

Section 6.9 Compliance Expenditure Cap. If a Change in Law occurring after the Effective Date has increased Seller's known or reasonably expected costs to comply with Seller's obligations under this Agreement with respect to obtaining, maintaining, conveying or effectuating Buyer's use of (as applicable) any Products, then the Parties agree that the maximum aggregate amount of out-of-pocket costs and expenses ("**Compliance Costs**") Seller shall be required to bear during the Delivery Term to comply with all of such obligations shall be capped at twenty-five thousand dollars ($25,000.00) per MW of Contract Capacity ("**Compliance Expenditure Cap**"). Seller's internal administrative costs associated with obtaining, maintaining, conveying or

effectuating Buyer's use of (as applicable) any Product are excluded from the Compliance Expenditure Cap.

Any actions required for Seller to comply with its obligations set forth in the first paragraph above, the Compliance Costs of which will be included in the Compliance Expenditure Cap, shall be referred to collectively as the "**Compliance Actions**." Seller will determine, in Seller's reasonable discretion, the implementation schedule for Compliance Actions.

If Seller reasonably anticipates the need to incur Compliance Costs in excess of the Compliance Expenditure Cap in order to take any Compliance Action Seller shall provide Notice to Buyer of such anticipated Compliance Costs.

Buyer will have sixty (60) days to evaluate such Notice (during which time period Seller is not obligated to take any Compliance Actions described in the Notice) and shall, within such time, either (1) agree to reimburse Seller for all of the Compliance Costs that exceed the Compliance Expenditure Cap (such Buyer-agreed upon costs, the "**Accepted Compliance Costs**"), or (2) waive Seller's obligation to take such Compliance Actions, or any part thereof for which Buyer has not agreed to reimburse Seller. If Buyer does not respond to a Notice given by Seller under this Section 6.9 within sixty (60) days after Buyer's receipt of same, Buyer shall be deemed to have waived its rights to require Seller to take the Compliance Actions that are the subject of the Notice, and Seller shall have no further obligation to take, and no liability for any failure to take, these Compliance Actions for the remainder of the Term.

If Buyer agrees to reimburse Seller for the Accepted Compliance Costs, then Seller shall endeavor in good faith to expeditiously implement the Compliance Actions covered by the Accepted Compliance Costs as agreed upon by the Parties and Buyer shall reimburse Seller for Seller's actual costs to effect the Compliance Actions, not to exceed the Accepted Compliance Costs, within sixty (60) days of Buyer's receipt of any invoice from Seller.

ARTICLE VII
ENVIRONMENTAL ATTRIBUTES

Section 7.1 Transfer of Environmental Attributes. For and in consideration of Buyer entering into this Agreement, and in addition to the agreement by and between Buyer and Seller to purchase and sell Facility Energy on the terms and conditions set forth herein, Seller shall transfer to Buyer, and Buyer shall receive from Seller, all right, title, and interest in and to all Environmental Attributes, whether now existing or acquired by Seller or that hereafter come into existence or are acquired by Seller during the Delivery Term associated with the Facility Energy. Seller agrees to transfer and make such Environmental Attributes available to Buyer immediately to the fullest extent allowed by applicable law upon Seller's production or acquisition of the Environmental Attributes. Seller represents and covenants that it has not assigned, transferred, conveyed, encumbered, sold or otherwise disposed of and shall not assign, transfer, convey, encumber, sell or otherwise dispose of all or any portion of such Environmental Attributes to any Person other than Buyer or attempt to do any of the foregoing with respect to any of the Environmental Attributes except with respect to any sales by Seller pursuant to Section 5.1. Buyer

and Seller acknowledge and agree that the consideration for the transfer of Environmental Attributes is contained within the Contract Price.

Section 7.2 Reporting of Ownership of Environmental Attributes. During the Agreement Term, Seller shall not report to any Person that the Environmental Attributes granted hereunder to Buyer belong to any Person other than Buyer, and Buyer may report under any program that such Environmental Attributes purchased hereunder belong to it except with respect to any sales by Seller pursuant to Section 5.1, and during a Force Majeure.

Section 7.3 Environmental Attributes. Upon the request of Buyer or Buyer's Authorized Representative, Seller shall take all reasonable actions and execute all documents or instruments necessary under applicable law regulations, guidebooks promulgated by the CEC or PUC, bilateral arrangements or other voluntary Environmental Attribute programs of any kind, as applicable, to maximize the attribution, accrual, realization, generation, production, recognition and validation of Environmental Attributes throughout the Agreement Term and Seller shall file with the CEC and any other applicable Persons all materials and documents required to demonstrate that the Facility is entitled to be CEC Certified.

Section 7.4 WREGIS. In furtherance and not in limitation of Section 7.3, prior to Seller's first delivery of Facility Energy hereunder, Seller shall register with WREGIS to evidence the transfer of any Environmental Attributes under applicable law or any voluntary program ("***WREGIS Certificates***") associated with Facility Energy in accordance with WREGIS reporting protocols and WREGIS Operating Rules and shall register the Facility with WREGIS. After the Facility is registered with WREGIS, at the option of Buyer's Authorized Representative, Seller shall transfer WREGIS Certificates using the Forward Certificate Transfer method as described in WREGIS Operating Rules from Seller's WREGIS account to Buyer's WREGIS accounts, as designated by Buyer's Authorized Representative. Seller shall be responsible for WREGIS Certificate issuance fees and WREGIS expenses associated with registering the Facility, maintaining its account, acquiring and arranging for a Qualified Reporting Entity ("***QRE***") and any applicable QRE agreements, and transferring WREGIS Certificates to Buyer, Buyer's Authorized Representative, or any other designees. Buyer shall be responsible for its WREGIS expenses associated with maintaining its own account, or the accounts of its designees, if any, and subsequent transferring or retiring by it of WREGIS Certificates, or Seller's fees for the retirement of WREGIS Certificates on behalf of Buyer. Forward Certificate Transfers shall occur monthly based on the certificate creation timeline established by the WREGIS Operating Rules. Seller shall be responsible for, at its expense, validating and disputing data with WREGIS prior to WREGIS Certificate creation each Month. In addition to the foregoing, Seller shall document the production and transfer of Environmental Attributes under this Agreement to Buyer by delivering to Buyer an attestation in substantially the form attached as Appendix D for the Environmental Attributes associated with Facility Energy, if any, measured in whole MWh, or by such other method as Buyer shall designate.

Section 7.5 Further Assurances. In addition to and not in limitation of Section 7.4, Seller shall document the production of Environmental Attributes by delivering with each invoice to Buyer an attestation for the Environmental Attributes associated with Facility Energy, if any, for the preceding Month in the form of the attestation set forth as Appendix D. At Buyer's

Authorized Representative's request, the Parties shall execute all reasonable documents and instruments and take commercially reasonable actions in order to effect the transfer of the Environmental Attributes specified in this Agreement to Buyer and to maximize the attribution, accrual, realization, generation, production, recognition and validation of Environmental Attributes throughout the Agreement Term. In the event of the promulgation of a scheme involving Environmental Attributes administered by CAMD, upon notification by CAMD that any transfers contemplated by this Agreement shall not be recorded, each Party shall promptly cooperate in taking all reasonable actions necessary so that such transfer can be recorded. Each Party shall promptly give the other Party copies of all documents it submits to CAMD to effectuate any transfers.

ARTICLE VIII
CAPACITY RIGHTS

Section 8.1 Capacity Rights. For and in consideration of Buyer entering into this Agreement, and in addition to the agreement by Buyer and Seller to purchase and sell Facility Energy and Environmental Attributes on the terms and conditions set forth herein, Seller hereby transfers to Buyer, and Buyer hereby accepts from Seller, all of Seller's rights, title and interest in and to the Capacity Rights. The consideration for the transfer of Capacity Rights, if any, is contained within the Contract Price. In no event shall Buyer have any obligation or liability whatsoever for any debt pertaining to the Facility by virtue of Buyer's ownership of the Capacity Rights or otherwise. Throughout the Delivery Term, Seller shall use commercially reasonable efforts to maintain eligibility for Full Capacity Deliverability Status for the Facility from the CAISO and shall perform all actions necessary to ensure that the Facility qualifies to provide Resource Adequacy Benefits to Seller.

Section 8.2 Covenant Regarding Capacity Rights. Seller represents and covenants that it has not assigned, transferred, conveyed, encumbered, sold or otherwise disposed of and shall not in the future assign, transfer, convey, encumber, sell or otherwise dispose of any of the Capacity Rights to any Person other than Buyer or attempt to do any of the foregoing with respect to any of the Capacity Rights. During the Agreement Term, Seller shall not report to any Person that any of the Capacity Rights belong to any Person other than Buyer. Buyer may, at its own risk and expense, report to any Person that the Capacity Rights belongs to it.

Section 8.3 Further Assurances. Seller shall execute and deliver such documents and instruments and take such other action as reasonably required by the CAISO and as Buyer's Authorized Representative may reasonably request to effect recognition and transfer of the Capacity Rights to Buyer. Seller shall bear the costs associated therewith.

Section 8.4 Resource Adequacy Failure.

(a) RA Deficiency Determination. For each RA Shortfall Month, Seller shall pay to Buyer the RA Deficiency Amount as liquidated damages or provide Replacement RA, in each case, as the sole and exclusive remedy for the Capacity Rights Seller failed to convey to Buyer.

(b) RA Deficiency Amount Calculation. Commencing on the Initial Delivery Date, for each RA Shortfall Month, Seller shall pay to Buyer an amount (the "**RA Deficiency Amount**") equal to the product of the difference, expressed in kW, of (i) the Net Qualifying Capacity for such month, minus (ii) the amount of Resource Adequacy Capacity supplied from the Facility for such month, multiplied by the RA Capacity Rate; *provided* that Seller may, as an alternative to paying RA Deficiency Amounts, provide Replacement RA in the amount of (X) the Net Qualifying Capacity with respect to such month, minus (Y) the amount of Resource Adequacy Capacity supplied from the Facility with respect to such month, provided that any Replacement RA capacity is communicated by Seller to Buyer with Replacement RA product information in a written notice at least sixty-five (65) days before the relevant deadlines for the corresponding Compliance Showings applicable to the relevant Showing Month.

(c) Option to Provide Replacement RA. If Seller desires to provide replacement Resource Adequacy Capacity for any Showing Month from a different generating unit other than the Facility (the "**Replacement RA**"), then Seller may provide Buyer with Replacement RA from one or more replacement units, provided that in each case the Replacement RA is supplied from like-for-like replacement units that provide Buyer with equivalent Capacity Attributes as the Facility.

(d) Availability Standards. Seller agrees that the Facility may be subject to the terms of the Availability Standards, Non-Availability Charges, and Availability Incentive Payments as contemplated in the CAISO Tariff. Furthermore, the Parties agree that any Availability Incentive Payments are for the benefit of the Buyer and for Buyer's account and that any Non-Availability Charges are the responsibility of the Buyer and for Buyer's account; provided however, that notwithstanding the foregoing, Seller shall assume all liability and reimburse Buyer for any and all Non-Availability Charges incurred by Buyer because of Seller's failure to perform any covenant or obligation set forth in this Agreement.

ARTICLE IX
BILLING; PAYMENT; AUDITS; METERING; ATTESTATIONS; POLICIES

Section 9.1 Billing and Payment. Billing and payment for all Products shall be as set forth in this ARTICLE IX.

Section 9.2 Calculation of Energy Delivered; Invoices and Payment.

(a) Not later than the tenth (10th) day of each Month, commencing with the next Month following the Month in which Facility Energy is first delivered by Seller and received by Buyer pursuant to the terms and conditions of this Agreement, Seller shall deliver to Buyer an invoice showing the amount due for the preceding Month from Buyer to Seller for Facility Energy, Capacity Rights and Environmental Attributes. Seller shall calculate the amount of Facility Energy from meter readings at the Electric Metering Devices maintained pursuant to Section 9.6, adjusting for any applicable station load, transformation losses and transmission losses to the Point of Delivery in accordance with a methodology agreed to by Buyer. Each invoice shall show the title of the Agreement and, if applicable, the Agreement number, the name, address and identifying information of Seller and the identification of material, equipment or services covered by the

invoices, and shall be sent to the address set forth in Appendix F or such other address as Buyer may provide to Seller. Seller shall separately provide in such invoice for any other amounts due to Seller, including amounts due under Section 6.5. Any electronic information delivered by Seller under this ARTICLE IX shall be in a format such as Microsoft Excel (or its equivalent) that allows Buyer to cut, paste or otherwise readily use and work with such information or documentation or as otherwise mutually agreed by the Parties.

(b) Concurrently with the delivery of each Monthly invoice, Seller shall deliver attestations of all Environmental Attribute transfers (including those transferred with WREGIS) substantially in the form set forth in Appendix D.

(c) Subject to Section 9.2(d) and Section 9.3, not later than the twenty-fifth (25th) day after receipt by Buyer of Seller's Monthly invoice (or the next succeeding Business Day, if the twenty-fifth (25th) day is not a Business Day), Buyer shall pay to Seller, by wire transfer of immediately available funds to an account specified by Seller or by any other means agreed to by the Parties from time to time, the amount set forth as due in such Monthly invoice.

(d) Notwithstanding Section 9.2(c), if Buyer believes that it has insufficient information to verify the amount of Deemed Generated Energy calculated by Seller in the invoice, or if Buyer requires additional time to verify such information, Buyer shall notify Seller thereof within twenty-five (25) days after receipt of an invoice from Seller, and timely pay the amounts set forth in such Monthly invoice not related to Deemed Generated Energy. Within thirty (30) days after receipt by Buyer of additional information regarding such Deemed Generated Energy calculation, or on the date mutually agreed to by the Parties, Buyer shall pay to Seller the amount specified in the invoice or notify Seller of any discrepancies with respect to its calculation of the Deemed Generated Energy, in which event such invoice shall be subject to the provisions of Section 9.3.

(e) Seller shall, in subsequent invoices, adjust previously invoiced amounts to reflect (i) adjustments pursuant to Section 9.3, or (ii) adjustments, reconciliations or final settlements with WREGIS occurring after the date of the initial invoice, or any other adjustments agreed to by the Parties (which shall be without interest of any kind), *provided* that Buyer shall not be required to make invoice payments if the invoice is received more than one (1) year after the billing period.

(f) Except with respect to disputed invoices where the dispute is first raised within six months after the applicable Monthly billing period and for any adjustments made pursuant to Section 9.2(e) and Section 9.6(a), Buyer shall not be required to make invoice payments if the invoice is received more than six (6) Months after the applicable Monthly billing period.

Section 9.3 Disputed Invoices. If any portion of any invoice is in dispute, the undisputed amount shall be paid when due. The Party disputing a payment shall promptly notify the other Party of the basis for the dispute, setting forth the details of such dispute in reasonable specificity. Disputes shall be discussed directly by the Parties' Authorized Representatives, who shall use reasonable efforts to amicably and promptly resolve such Disputes, and any failure to

agree shall be subject to resolution in accordance with Section 12.3. Upon resolution of any Dispute, if all or part of the disputed amount is later determined to have been due, then the Party owing such payment or refund shall pay within ten (10) days after receipt of notice of such determination the amount determined to be due plus interest thereon at the Interest Rate from the due date until the date of payment. For purposes of this Section 9.3, "***Interest Rate***" shall mean the lesser of (i) two percent (2%) above the per annum Prime Rate reported daily in *The Wall Street Journal*, or (ii) the maximum rate permitted by applicable Requirements of Law.

Section 9.4 Right of Setoff. In addition to any right now or hereafter granted under applicable law and not by way of limitation of any such rights, each Party shall have the right at any time or from time to time without notice to other Party or to any other Person, any such notice being hereby expressly waived, to set off against any amount due a Party from the other Party under this Agreement or otherwise any amount due such Party from the other Party under this Agreement or otherwise, including any amounts due because of breach of this Agreement or any other obligation.

Section 9.5 Records and Audits. Seller shall maintain, and the Authorized Auditors shall have access to, all records and data pertaining to the performance and management of this Agreement (including compliance with the Requirements) and related Subcontracts, and as necessary to properly reflect all costs claimed to have been incurred hereunder and thereunder, including (a) in their original form, all (i) documents provided to Seller in the ordinary course of business for the Facility, (ii) documents for billing, costs, metering, and Environmental Attributes, (iii) books, records, documents, reports, deliverables, employee time sheets, accounting procedures and practices, and (iv) records of financial transactions, and (b) other evidence, regardless of form (for example, machine readable media such as disk or tape, etc.) or type (for example, databases, applications software, database management software, or utilities). If Seller is required to submit cost or pricing data in connection with this Agreement, Seller shall maintain all records and documents necessary to permit adequate evaluation of the cost or pricing data submitted, along with the computations and projections used. In the event of a Dispute, records that relate to the Agreement, Dispute, litigation or costs, or items to which an audit exception has been taken, shall be maintained by both Buyer and Seller. All records shall be retained, and shall be subject to examination and audit by the Authorized Auditors, for a period of not less than four (4) years following final payment made by Buyer hereunder, the expiration or termination date of this Agreement, or final settlement of all disputes, claims, or litigation, whichever is later. Seller shall make said records or, to the extent accepted by the Authorized Auditors, photographs, micro-photographs, or other authentic reproductions thereof, available to the Authorized Auditors at Seller's principal business office or any other of Seller's offices as mutually agreed upon by Buyer and Seller, at all reasonable times and without charge. The Authorized Auditors may reproduce, photocopy, download, transcribe, and the like any such records. Any information provided by Seller on machine-readable media shall be provided in a format accessible and readable by the Authorized Auditors. Seller shall not, however, be required to furnish the Authorized Auditors with commonly available software. Seller shall be subject at any time with fourteen (14) days prior written notice to audits or examinations by Authorized Auditors, relating to all billings and required to verify compliance with all Agreement requirements relative to practices, methods, procedures, performance, compensation, and documentation. Examinations and audits shall be performed using generally accepted auditing practices and principles and applicable governmental

audit standards. If Seller utilizes or is subject to Federal Acquisition Regulation, Part 30 and 31, et seq. accounting procedures, or a portion thereof, examinations and audits shall utilize such information. To the extent that an Authorized Auditor's examination or audit reveals inaccurate, incomplete or non-current records, or records are unavailable, the records shall be considered defective. Consistent with standard auditing procedures, Seller shall be provided fifteen (15) days to review an Authorized Auditor's examination results or audit and respond to Buyer prior to the examination's or audit's finalization and public release. Seller shall contractually require all Subcontractors performing services under this Agreement to comply with the provisions of this Section 9.5 by inserting this Section 9.5 into each Subcontract.

Section 9.6 Electric Metering Devices.

(a) Facility Energy shall be measured using a CAISO-approved revenue-quality Electric Metering Device that complies with the CAISO Tariff and relevant protocols and is dedicated exclusively to the Facility. The Electric Metering Device may be installed on the low-side of Seller's transformer and will include adjustments to reflect losses to the Point of Delivery. Seller shall arrange and bear all costs associated with the installation of the Electric Metering Devices needed for the registration, recording and transmission of information regarding the Facility Energy. Seller hereby agrees to provide a mutually agreed set of meter data to Buyer, which data shall be accessible to, and usable by, Buyer. In addition to providing Buyer with its meter data, Seller shall use commercially reasonable efforts to support any efforts by Buyer to obtain CAISO meter data applicable to the Facility and all inspection, testing and calibration data and reports from the CAISO. If the CAISO makes any adjustment to any CAISO meter data for a given time period not exceeding three (3) months, Seller agrees that it shall submit revised Monthly invoices, pursuant to this ARTICLE IX covering the entire applicable time period in order to fully conform such adjustments to the meter data. Seller shall submit any revised invoices no later than thirty (30) days after the date on which the CAISO provides Seller with binding adjustments to the meter data.

(b) Seller or its Authorized Representative, at no expense to Buyer, shall inspect and test all Electric Metering Devices upon installation and at least annually thereafter. Seller shall provide Buyer with reasonable advance notice of, and permit representatives of Buyer to witness and verify, such inspections and tests. Upon reasonable request by Buyer, Seller or its Authorized Representative shall perform additional inspections or tests of any Electric Metering Device and shall permit a qualified representative of Buyer to inspect or witness the testing of any Electric Metering Device. The actual expense of any additional inspection or testing reasonably requested shall be borne by Seller. Seller shall provide copies of any inspection or testing reports to Buyer.

(c) If an Electric Metering Device fails to register, or if the measurement made by an Electric Metering Device is found upon testing to be inaccurate by more than plus or minus one percent (+/- 1.0%), an adjustment shall be made to correct all measurements made by the inaccurate or defective Electric Metering Device for both the amount of the inaccuracy and the period of the inaccuracy, such adjustment to be made by the Scheduling Coordinator. To the extent that the adjustment period covers a period of deliveries for which payment has already been made by Buyer, Buyer shall use the corrected measurements as determined in accordance with this

Section 9.6 to recompute the amount due for the period of the inaccuracy and shall subtract the previous payments by Buyer for this period from such recomputed amount. If the difference is a positive number, the difference shall be paid by Buyer to Seller; if the difference is a negative number, that difference shall be paid by Seller to Buyer, or at the direction of Buyer, may take the form of an offset to payments due to Seller from Buyer. Payment of such difference by the owing Party shall be made not later than thirty (30) days after the owing Party receives notice of the amount due, unless Buyer elects payment via an offset.

Section 9.7 Taxes. Seller shall be responsible for and shall pay, before the due dates therefor, any and all federal, state, and local Taxes incurred by it as a result of entering into this Agreement and all Taxes imposed or assessed with respect to the Facility, or any other assets of Seller, the Products or the transaction arising before or at the Point of Delivery. Buyer shall pay or cause to be paid all Taxes on or with respect to the Products or the transaction from (but excluding) the Point of Delivery to Buyer. If Seller is required by a Requirement of Law to remit or pay Taxes that are the responsibility of Buyer hereunder, Buyer shall promptly reimburse Seller for such Taxes. If Buyer is required by Requirement of Law to remit or pay Taxes that are Seller's responsibility hereunder, Buyer may deduct such amounts from payments to Seller hereunder; if Buyer elects not to deduct such amounts from Seller's payments, Seller shall promptly reimburse Buyer for such amounts upon request. Nothing shall obligate or cause a Party to pay or be liable to pay any Taxes for which it is exempt under law. A Party that is exempt at any time and for any reason from one or more Taxes shall bear the risk that such exemption shall be lost or the benefit of such execution be reduced.

ARTICLE X
REPRESENTATIONS, WARRANTIES AND COVENANTS

Section 10.1 Representations and Warranties of Buyer. Buyer makes the following representations and warranties to Seller as of the Effective Date and continuing throughout the Delivery Term:

(a) Buyer is a validly existing California joint powers authority, and has the legal power and authority to own its properties, to carry on its business as now being conducted and to enter into this Agreement, and to carry out the transactions contemplated hereby, and to perform and carry out all covenants and obligations on its part to be performed under and pursuant to this Agreement.

(b) The execution, delivery and performance by Buyer of this Agreement (i) have been duly authorized by all necessary action, and does not and will not require any consent or approval of Buyer's regulatory or governing bodies, other than that which has been obtained; and (ii) does not violate any federal, state, and local law, including the California Government Code and similar laws.

(c) This Agreement constitutes the legal, valid and binding obligation of Buyer enforceable in accordance with its terms, except as such enforceability may be limited by bankruptcy, insolvency, reorganization or similar laws relating to or affecting the enforcement of

creditors' rights generally or by general equitable principles, regardless of whether such enforceability is considered in a proceeding in equity or at law.

Section 10.2 Representations and Warranties of Seller. Except as otherwise set forth in this Agreement, Seller makes each of the following representations and warranties to Buyer as of the Effective Date and continuing throughout the Delivery Term.

(a) Seller is an independent special district formed under the Irrigation District Act (Division 11 of the California Water Code) of the State of California, and has legal power and authority to carry on its business as now being conducted and to enter into this Agreement, and to carry out the transactions contemplated hereby, and to perform and carry out all covenants and obligations on its part to be performed under and pursuant to this Agreement.

(b) Seller owns and operates the Facility and has not assigned, transferred, conveyed, sold or otherwise disposed of the Facility.

(c) The execution, delivery and performance by Seller of this Agreement (i) have been duly authorized by all necessary action, and does not and will not require any consent or approval of Seller's regulatory or governing bodies, other than that which has been obtained; and (ii) does not violate any federal, state, and local law, including the California Government Code and similar laws.

(d) This Agreement constitutes the legal, valid and binding obligation of Seller enforceable in accordance with its terms, except as such enforceability may be limited by bankruptcy, insolvency, reorganization or similar laws relating to or affecting the enforcement of creditors' rights generally or by general equitable principles, regardless of whether such enforceability is considered in a proceeding in equity or at law.

(e) The execution and delivery of this Agreement, the consummation of the transactions contemplated hereby and thereby and the fulfillment of and compliance with the provisions of this Agreement, does not conflict with or constitute a breach of or a default under, any of the terms, conditions or provisions of any Requirement of Law, or any organizational documents, agreement, deed of trust, mortgage, loan agreement, other evidence of indebtedness or any other agreement or instrument to which Seller is a party or by which it or any of its property is bound, or result in a breach of or a default under any of the foregoing or result in or require the creation or imposition of any Lien upon any of the properties or assets of Seller (except as contemplated hereby), and Seller has obtained all Permits and licenses required for the operation, and maintenance of the Facility in accordance with the Requirements and the performance of Seller's obligations hereunder to which Seller is a party, or such Permits and licenses are reasonably expected to be timely obtained in the ordinary course of business.

(f) There is no pending, or to the knowledge of Seller, threatened action or proceeding affecting Seller before any Governmental Authority, which purports to affect the legality, validity or enforceability of this Agreement.

(g) North Yuba Water District vs. South Feather Water and Power Agency, Superior Court of the State of California, County of Butte, Case No. 21CV01563 and any related cases does not affect the legality, validity or enforceability of this Agreement.

(h) Seller is not in violation of any Requirement of Law, which violations, individually or in the aggregate, would reasonably be expected to result in a material adverse effect on the business, assets, operations, condition (financial or otherwise) or prospects of Seller, or the ability of Seller to perform any of its obligations under this Agreement.

(i) Seller owns or possesses or will acquire all patents, rights to patents, trademarks, copyrights and licenses necessary for the performance by Seller of its obligations under this Agreement, and, to Seller's knowledge, Seller's use thereof does not infringe on the intellectual property rights of third parties.

(j) Seller has not assigned, transferred, conveyed, encumbered, sold or otherwise disposed of the Products except as provided herein.

(k) The Facility is located in the State of California.

(l) Seller will be responsible for obtaining all permits necessary to enter into this Agreement and operate the Facility and Seller will be the applicant on any CEQA documents.

ARTICLE XI
DEFAULT; TERMINATION AND REMEDIES; PERFORMANCE DAMAGE

Section 11.1 Default. Each of the following events or circumstances shall constitute a "***Default***" by the responsible Party (the "***Defaulting Party***"):

(a) **Payment Default**. Failure by a Party to make any payment under this Agreement when and as due (other than payments disputed in good faith) that is not cured within thirty (30) days after receipt of notice thereof from the other Party (which amount shall include payment of interest from the due date at the Interest Rate).

(b) **Performance Default**. Failure by a Party to perform any of its duties or obligations under this Agreement (other than any failure that is separately listed as a Default of Seller under this Section 11.1) that is not cured within thirty (30) days after receipt of notice thereof from the other Party; *provided* that if such failure is curable, but cannot be cured within such thirty (30) day period despite reasonable commercial efforts and such failure is not a failure to make a payment when due, such Party shall have up to sixty (60) additional days to cure.

(c) **Breach of Representation and Warranty.** Any representation, warranty, certification or other statement made by a Party in this Agreement that is false or inaccurate at the time made and materially and adversely affects the Party's ability to perform its obligations hereunder; *provided* that no Default shall exist if such falsity or inaccuracy is remedied within thirty (30) days after receipt of notice thereof from another Party; and further provided that if such

falsity or inaccuracy is curable, but cannot be cured within such thirty (30) day period despite reasonable commercial efforts, such Party shall have up to sixty (60) additional days to cure.

(d) **Bankruptcy**. Bankruptcy of Buyer or Seller.

(e) **Insurance Default**. The failure of Seller to maintain and provide acceptable evidence of the required Insurance for the required period of coverage as set forth in Appendix E that is not cured within five (5) Business Days after receipt of notice of such failure from Buyer.

(f) **Fundamental Change**. Except as permitted by Section 12.7, a Party makes an assignment of its rights or delegation of its obligations under this Agreement.

(g) **Casualty**. Seller fails to meet its obligations under Section 12.19(d).

Section 11.2 Default Remedy.

(a) If Buyer is in Default for nonpayment, subject to any duty or obligation under this Agreement, Seller may, at its option, suspend performance hereunder or continue to provide services pursuant to its obligations under this Agreement; *provided* that nothing in this Section 11.2(a) shall affect Seller's rights and remedies set forth in this Section 11.2. Seller's continued service to Buyer shall not act to relieve Buyer of any of its duties or obligations under this Agreement.

(b) Notwithstanding any other provision herein, if any Default has occurred and is continuing, the affected Party may, whether or not the dispute resolution procedure set forth in Section 12.3 has been invoked or completed, bring an action in any court of competent jurisdiction as set forth in Section 12.3 seeking injunctive relief in accordance with applicable rules of civil procedure.

(c) Except as expressly limited by this Agreement, if a Default has occurred and is continuing and Buyer is the Defaulting Party, Seller may without further notice exercise any rights and remedies provided herein or otherwise available at law or in equity including a termination of this Agreement pursuant to Section 11.3. No failure of Seller to exercise, and no delay in exercising, any right, remedy or power hereunder shall operate as a waiver thereof, nor shall any single or partial exercise by Seller of any other right, remedy or power hereunder preclude any other or future exercise of any right, remedy or power.

(d) Except as expressly limited by this Agreement, if a Default has occurred and is continuing and Seller is the Defaulting Party, Buyer may without further notice exercise any rights and remedies provided for herein, or otherwise available at law or equity, including termination of this Agreement pursuant to Section 11.3. No failure of Buyer to exercise, and no delay in exercising, any right, remedy or power hereunder shall operate as a waiver thereof, nor shall any single or partial exercise by Buyer of any right, remedy or power hereunder preclude any other or future exercise of any right, remedy or power by Buyer.

Section 11.3 Termination for Default.

(a) If a Default occurs, the Party that is not the Defaulting Party (the "***Non-Defaulting Party***") may, for so long as the Default is continuing and, to the extent permitted by applicable law, without limiting any other rights or remedies available to the Non-Defaulting Party under this Agreement, by notice by it ("***Termination Notice***") to the Defaulting Party (i) establish a date (which shall be no earlier than the date of such notice and no later than twenty (20) days after the date of such notice) ("***Early Termination Date***") on which this Agreement shall terminate, and (ii) withhold any payments due in respect of this Agreement; *provided*, upon the occurrence of any Default of the type described in Section 11.1(d), this Agreement shall automatically terminate, without notice or other action by either Party as if an Early Termination Date had been declared immediately prior to such event.

(b) If an Early Termination Date has been designated, the Non-Defaulting Party shall appoint a qualified independent third party to calculate in a commercially reasonable manner its Gains, Losses and Costs resulting from the termination of this Agreement and the resulting Termination Payment. The Gains, Losses and Costs relating to the Products that would have been required to be delivered under this Agreement had it not been terminated shall be determined by comparing the amounts Buyer would have paid for the Products under this Agreement to the equivalent quantities and relevant market prices, either quoted by one or more bona fide third party offers, or which are reasonably expected by the Non-Defaulting Party to be available in the market under a replacement contract for this Agreement covering the same products and having a term equal to the Remaining Term at the date of the Termination Notice, adjusted to account for differences in transmission, if any. To ascertain the market prices of a replacement contract, the Non-Defaulting Party may consider, among other valuations, quotations from dealers in Energy contracts and bona fide third party offers. The Non-Defaulting Party shall not be required to enter into any such replacement agreement in order to determine its Gains, Losses and Costs or the Termination Payment.

(c) For purposes of the Non-Defaulting Party's determination of its Gains, Losses and Costs and the Termination Payment, it shall be assumed, regardless of the facts, that Seller would have sold, and Buyer would have purchased, each day during the Remaining Term (i) Facility Energy in an amount equal to the Assumed Daily Deliveries, (ii) the Environmental Attributes associated therewith, and (iii) all other components of the Products. The "***Assumed Daily Deliveries***" shall be an amount equal to the average daily amount of Facility Energy forecasted to be delivered during an average hydrological period by Seller, during the Delivery Term, if any.

(d) The Non-Defaulting Party shall notify the Defaulting Party of the Termination Payment, which notice shall include a written statement explaining in reasonable detail the calculation of such amount. If the Termination Payment is a positive number, the Defaulting Party shall, within ten (10) Business Days after receipt of such notice, pay the Termination Payment to the Non-Defaulting Party, together with interest accrued at the Interest Rate from the Early Termination Date until paid.

(e) If the Defaulting Party disagrees with the calculation of the Termination Payment and the Parties cannot otherwise resolve their differences, the calculation of the Termination Payment shall be submitted to the dispute resolution process provided in Section 12.3. Following resolution of the dispute, the Defaulting Party shall pay the full amount of the Termination Payment (if any) as determined by such resolution as and when required, but no later than thirty (30) days following the date of such resolution, together with all interest, at the Interest Rate, that accrued from the Early Termination Date until the date the Termination Payment is paid.

(f) For purposes of this Agreement:

(i) "***Gains***" means, with respect to a Party, an amount equal to the present value of the economic benefit (exclusive of Costs), if any, resulting from the termination of its obligations under this Agreement, determined in a commercially reasonable manner;

(ii) "***Losses***" means, with respect to a Party, an amount equal to the present value of the economic loss (exclusive of Costs), if any, resulting from the termination of its obligations under this Agreement, determined in a commercially reasonable manner;

(iii) "***Costs***" means, with respect to a Party, brokerage fees, commissions and other similar transaction costs and expenses reasonably incurred in terminating any arrangement pursuant to which it has hedged its obligations or in entering into new arrangements which replace this Agreement, excluding attorneys' fees, if any, incurred in connection with enforcing its rights under this Agreement. Each Party shall use reasonable efforts to mitigate or eliminate its Costs.

(iv) In no event shall a Party's Gains, Losses or Costs include any penalties or similar charges imposed by the Non-Defaulting Party.

(v) The Present Value Rate shall be used as the discount rate in all present value calculations required to determine Gains, Losses and Costs.

(g) At the time for payment of any amount due under this Section 11.3 each Party shall pay to the other Party, all additional amounts, if any, payable by it under this Agreement (including any amounts withheld pursuant to Section 11.3(a)).

(h) Notwithstanding the forgoing provisions of Section 11.3, in no event shall a termination payment be due to a Defaulting Party.

ARTICLE XII
MISCELLANEOUS

Section 12.1 Authorized Representative. Each Party shall designate an authorized representative who shall be authorized to act on its behalf with respect to those matters contained herein (each an "***Authorized Representative***"), which shall be the functions and responsibilities of

such Authorized Representatives. Each Party may also designate an alternate who may act for the Authorized Representative. Within thirty (30) days after execution of this Agreement, each Party shall notify the other Party of the identity of its Authorized Representative, and alternates if designated, and shall promptly notify the other Party of any subsequent changes in such designation. The Authorized Representatives shall have no authority to alter, modify, or delete any of the provisions of this Agreement. To the extent that an Authorized Representative's contact information is not provided in Appendix F, at the time a Party designates such Authorized Representative, such Party shall concurrently provide written notice to the other Party of such Authorized Representative's contact information.

Section 12.2 Notices. With the exception of billing invoices pursuant to Article 9 and day-to-day ordinary course and operational communications, all notices, requests, demands, consents, approvals, waivers and other communications which are required under this Agreement shall be (a) in writing (regardless of whether the applicable provision expressly requires a writing), (b) deemed properly sent if delivered in person or sent by facsimile transmission, reliable overnight courier, or sent by registered or certified mail, postage prepaid to the persons specified in Appendix F, and (c) deemed delivered, given and received on the date of delivery, in the case of facsimile transmission, or on the date of receipt or rejection in the case of delivery in person, by reliable overnight courier, or by registered or certified mail. In addition to the foregoing, the Parties may agree in writing at any time to deliver notices, requests, demands, consents, approvals, waivers and other communications through alternate methods, such as electronic mail.

Section 12.3 Dispute Resolution.

(a) In the event of any claim, controversy or dispute between the Parties arising out of or relating to or in connection with this Agreement (including any dispute concerning the validity of this Agreement or the scope and interpretation of this Section 12.3) (a "***Dispute***"), either Party (the "***Notifying Party***") may deliver to the other Party (the "***Recipient Party***") notice of the Dispute with a detailed description of the underlying circumstances of such Dispute (a "***Dispute Notice***"). The Dispute Notice shall include a schedule of the availability of the Notifying Party's senior officers (having a title of senior vice president (or its equivalent) or higher) duly authorized to settle the Dispute, or, in the case of Seller, authorized to recommend settlement to Seller's Board of Directors, during the thirty (30) day period following the delivery of the Dispute Notice.

(b) The Recipient Party shall, within five (5) Business Days following receipt of the Dispute Notice, provide to the Notifying Party a parallel schedule of availability of the Recipient Party's senior officers (having a title of senior vice president (or its equivalent) or higher) duly authorized to settle the Dispute, or, in the case of Seller, authorized to recommend settlement to the Seller's Board of Directors. Following delivery of the respective senior officers' schedules of availability, the senior officers of the Parties shall meet and confer as often as they deem reasonably necessary during the remainder of the thirty (30) day period in good faith negotiations to resolve the Dispute to the satisfaction of each Party.

(c) In the event a Dispute is not resolved pursuant to the procedures set forth in Section 12.3(a) and Section 12.3(b) by the expiration of the thirty (30) day period set forth in

Section 12.3(a), then a Party may pursue any legal remedy available to it in accordance with the provisions of Section 12.12 and Section 12.13 of this Agreement.

(d) In addition to the Dispute resolution process set forth in this Section 12.3, the Parties shall comply with California law governing claims against public entities and presentment of such claims, if applicable.

Section 12.4 Further Assurances; Change in Electric Market Design.

(a) Each Party agrees to execute and deliver all further instruments and documents, and take all further actions not inconsistent with the provisions of this Agreement that may be reasonably necessary to effectuate the purposes and intent of this Agreement.

(b) If a change in the CAISO Tariff renders this Agreement or any provisions hereof incapable of being performed or administered, then either Party may request that Buyer and Seller enter into negotiations to make the minimum changes to this Agreement necessary to make this Agreement capable of being performed and administered, while attempting to preserve to the maximum extent possible the benefits, burdens, and obligations set forth in this Agreement as of the Effective Date. Upon delivery of such a request, Buyer and Seller shall engage in such negotiations in good faith. If Buyer and Seller are unable, within sixty (60) days after delivery of such request, to agree upon changes to this Agreement or to resolve issues relating to changes to this Agreement, then either Party may submit issues pertaining to changes to this Agreement to the Dispute resolution process set forth in Section 12.3. Notwithstanding the foregoing, a change in cost shall not in and of itself be deemed to render this Agreement or any of the provisions hereof incapable of being performed or administered, or constitute, or form the basis of, a Force Majeure.

Section 12.5 No Dedication of Facilities. Any undertaking by one Party to the other Party under any provisions of this Agreement shall not constitute the dedication of the Facility or any portion thereof of either Party to the public or to the other Party or any other Person, and it is understood and agreed that any such undertaking by either Party shall cease upon the termination of such Party's obligations under this Agreement.

Section 12.6 Force Majeure.

(a) A Party shall not be considered to be in Default in the performance of any of its obligations under this Agreement when and to the extent such Party's performance is prevented by a Force Majeure that, despite the exercise of due diligence, such Party is unable to prevent or mitigate, *provided* the Party has given a written detailed description of the full particulars of the Force Majeure to the other Party reasonably promptly after becoming aware thereof (and in any event within fourteen (14) days after the initial occurrence of the claimed Force Majeure event) (the "***Force Majeure Notice***"), which notice shall include information with respect to the nature, cause and date and time of commencement of such event, and the anticipated scope and duration of the delay. The Party providing such Force Majeure Notice shall be excused from fulfilling its obligations under this Agreement until such time as the Force Majeure has ceased to prevent performance or other remedial action is taken, at which time such Party shall promptly notify the other Party of the resumption of its obligations under this Agreement. If Seller is unable

to deliver, or Buyer is unable to receive, Facility Energy due to a Force Majeure, then Buyer shall have no obligation to pay Seller for Facility Energy not delivered or received by reason thereof. In no event shall Buyer be obligated to compensate Seller or any other Person for any losses, expenses or liabilities that Seller or such other Person may sustain as a consequence of any Force Majeure.

(b) The term "***Force Majeure***" means any act of God (including fire, flood, earthquake, extremely severe storm, lightning strike, tornado, volcanic eruption, hurricane or other natural disaster), labor disturbance, pandemic, strike or lockout of a national scope, act of the public enemy, war, insurrection, riot, explosion, terrorist activities or any order, regulation or restriction imposed by Governmental Authority, military or lawfully established civilian authorities, or other occurrence that (i) prevents one Party from performing any of its obligations under this Agreement, (ii) could not reasonably be anticipated as of the date of this Agreement, (iii) is not within the reasonable control of, or the result of negligence, willful misconduct, breach of contract, intentional act or omission or wrongdoing on the part of the affected Party (or any subcontractor or Affiliate of that Party, or any Person under the control of that Party or any of its subcontractors or Affiliates, or any Person for whose acts such subcontractor or Affiliate is responsible), and (iv) by the exercise of due diligence the affected Party is unable to overcome or avoid or cause to be avoided; *provided*, nothing in clause (iv) above shall be construed so as to require a Party to accede or agree to any provision not satisfactory to it in order to settle and terminate a strike or labor dispute in which it may be involved. Any Party rendered unable to fulfill any of its obligations by reason of a Force Majeure shall exercise due diligence to remove such inability with reasonable dispatch within a reasonable time period and mitigate the effects of the Force Majeure. The relief from performance shall be of no greater scope and of no longer duration than is required by the Force Majeure. Without limiting the generality of the foregoing, a Force Majeure does not include any of the following (each an "***Unexcused Cause***"): (1) any requirement to comply with a RPS Law or any change (whether voluntary or mandatory) in any RPS Law, or other Change in Law, that may affect the value of the Products; (2) events arising from the failure by Seller to operate or maintain the Facility in accordance with this Agreement; (3) any increase of any kind in any cost; (4) delays in or inability of a Party to obtain financing or other economic hardship of any kind; (5) Seller's ability to sell any Facility Energy at a price in excess of those provided in this Agreement or Buyer's ability to purchase Product or any part thereof at a price lower than those provided in this Agreement; (6) curtailment or other interruption of any Transmission Service, including public safety power shutoff's by the Transmission Provider; (7) failure of third parties to provide goods or services essential to a Party's performance; (8) Facility or equipment failure of a kind that is not caused by Force Majeure; or (9) any changes in the financial condition of Buyer or Seller affecting the affected Party's ability to perform its obligations under this Agreement.

(c) Buyer may terminate this Agreement if (i) a Force Majeure event occurs that diminishes the production of the Facility by more than fifty percent (50%) of the Contract Capacity for a period of eighteen (18) consecutive months, or (ii) the Facility is rendered inoperable and an independent engineer that is mutually acceptable to both Parties determines that the Facility cannot be repaired or replaced within a period not to exceed twenty four (24) months following the date of the occurrence of the Force Majeure event.

(d) Any termination of this Agreement under Section 12.6(c) shall be "no-fault" and neither Party shall have any liability or obligation to the other Party arising out of such termination. Notwithstanding the foregoing, upon any such termination, each Party shall pay the other Party for any and all amounts hereunder that may be owing, or other outstanding payments due in the ordinary course that occurred prior to the termination. The exercise by Buyer of its right to terminate the Agreement shall not render Buyer or Seller liable for any losses or damages incurred by the other Party whatsoever.

Section 12.7 Assignment of Agreement. Except as otherwise set forth in this Agreement, a Party shall not assign any of its rights, or delegate any of its obligations, in or under this Agreement, without the prior written consent of the other Party, and such consent not to be unreasonably withheld. Any purported assignment or delegation in violation of this provision shall be null and void and of no force or effect.

Section 12.8 Ambiguity. The Parties acknowledge that this Agreement was jointly prepared by them, by and through their respective legal counsel, and any uncertainty or ambiguity existing herein shall not be interpreted against either Party on the basis that the Party drafted the language, but otherwise shall be interpreted according to the application of the rules on interpretation of contracts.

Section 12.9 Attorneys' Fees & Costs. Both Parties agree that in any action to enforce the terms of this Agreement that each Party shall be responsible for its own attorneys' fees and costs. Each of the Parties to this Agreement was represented by its respective legal counsel during the negotiation and execution of this Agreement.

Section 12.10 Voluntary Execution. Both Parties acknowledge that they have read and fully understand the content and effect of this Agreement and that the provisions of this Agreement have been reviewed and approved by their respective counsel. The Parties further acknowledge that they have executed this Agreement voluntarily, subject only to the advice of their own counsel, and do not rely on any promise, inducement, representation or warranty that is not expressly stated herein.

Section 12.11 Entire Agreement; Amendments. This Agreement (including all Appendices and Exhibits) contains the entire understanding concerning the subject matter herein and supersedes and replaces any prior negotiations, discussions or agreements between the Parties, or any of them, concerning that subject matter, whether written or oral, except as expressly provided for herein. This is a fully integrated document. Each Party acknowledges that no other party, representative or agent, has made any promise, representation or warranty, express or implied, that is not expressly contained in this Agreement that induced the other Party to sign this document. This Agreement may be amended or modified only by an instrument in writing signed by each Party; provided, however, Appendix C contains detailed principles, descriptions and procedures for Scheduling and operation of the Facility, and Appendix C may be amended from time to time upon mutual written consent of the Authorized Representative of each Party.

Section 12.12 Governing Law. This Agreement was made and entered into in the County of Placer, California and shall be governed by, interpreted and enforced in accordance with the laws of the State of California, without regard to conflict of law principles.

Section 12.13 Venue. All litigation arising out of, or relating to this Agreement, shall be brought in a state or federal court in the County of Placer or the County of Butte in the State of California. The Parties irrevocably agree to submit to the exclusive jurisdiction of such courts and waive any defense of forum non conveniens.

Section 12.14 Execution in Counterparts. This Agreement may be executed in counterparts and upon execution by each signatory, each executed counterpart shall have the same force and effect as an original instrument and as if all signatories had signed the same instrument. Any signature page of this Agreement may be detached from any counterpart of this Agreement without impairing the legal effect of any signature thereon, and may be attached to another counterpart of this Agreement identical in form hereto by having attached to it one or more signature pages.

Section 12.15 Effect of Section Headings. Section headings appearing in this Agreement are inserted for convenience only and shall not be construed as interpretations of text.

Section 12.16 Waiver; Available Remedies. The failure of either Party to this Agreement to enforce or insist upon compliance with or strict performance of any of the terms or conditions hereof, or to take advantage of any of its rights hereunder, shall not constitute a waiver or relinquishment of any such terms, conditions or rights, but the same shall be and remain at all times in full force and effect. Except to the extent this Agreement expressly provides an exclusive remedy for a breach, nothing contained herein shall preclude either Party from seeking and obtaining any available remedies hereunder, including recovery of damages caused by the breach of this Agreement and specific performance or injunctive relief, or any other remedy given under this Agreement or now or hereafter existing in law or equity or otherwise. Seller acknowledges that money damages may not be an adequate remedy for violations of this Agreement and that Buyer may, in its sole discretion seek and obtain from a court of competent jurisdiction specific performance or injunctive or such other relief as such court may deem just and proper to enforce this Agreement or to prevent any violation hereof. Seller hereby waives any objection to specific performance or injunctive relief; provided that where this Agreement provides an exclusive remedy, then specific performance and injunctive relief are not available. The rights granted herein are cumulative except where otherwise provided herein.

Section 12.17 Relationship of the Parties. This Agreement shall not be interpreted to create an association, joint venture or partnership between the Parties hereto or to impose any partnership obligation or liability upon either Party. Neither Party shall have any right, power or authority to enter into any agreement or undertaking for, or act on behalf of, or to act as an agent or representative of, the other Party.

Section 12.18 Third Party Beneficiaries. The provisions of this Agreement are solely for the benefit of the Parties. Nothing in this Agreement, whether express or implied, shall be construed to give to, or be deemed to create in, any other Person, whether as a third party

beneficiary of this Agreement or otherwise, any legal or equitable right, remedy or claim in respect of this Agreement or any covenant, condition, provision, duty, obligation or undertaking contained or established herein. This Agreement shall not be construed in any respect to be a contract in whole or in part for the benefit of any Person that is not a party hereto.

Section 12.19 Indemnification; Damage or Destruction; Insurance; Condemnation; Limit of Liability.

(a) **Indemnification by Seller.** Seller undertakes and agrees to indemnify and hold harmless Buyer, Participating Members, and all of their respective commissioners, officers, agents, employees, advisors, and Authorized Representatives and assigns and successors in interest (collectively, "***Buyer Indemnitees***") and, at the option of Buyer, to defend such Buyer Indemnitees from and against any and all suits and causes of action (including proceedings before administrative agencies), claims, charges, damages, demands, judgments, civil fines and penalties, other monetary remedies or losses of any kind or nature whatsoever, for death, bodily injury or personal injury to any person, including Seller's employees and agents, or third persons, or damage or destruction to any property of either Party or third persons, in any manner arising by reason of any breach of this Agreement by Seller, any failure of a representation, warranty or guarantee of Seller hereunder to be true in all material respects, the negligent acts, errors, omissions or willful misconduct incident to the performance of this Agreement on the part of Seller, or any of the Seller's officers, agents, employees, or subcontractors of any tier, except to the extent caused by the gross negligence or willful misconduct of any such Seller Indemnitee. Any liability of Seller shall be limited to the extent of actual coverage and coverage limits of the insurance policies described in Appendix E.

(b) **Indemnification by Buyer.** Buyer undertakes and agrees to indemnify and hold harmless Seller, and all of its respective officers, agents, employees, directors, advisors, and Authorized Representatives and assigns and successors in interest (collectively, "***Seller Indemnitees***") and, at the option of Seller, to defend such Seller Indemnitees from and against any and all suits and causes of action (including proceedings before administrative agencies), claims, charges, damages, demands, judgments, civil fines and penalties, other monetary remedies or losses of any kind or nature whatsoever, for death, bodily injury or personal injury to any person, including Buyer's employees and agents, or third persons, or damage or destruction to any property of either Party or third persons, in any manner arising by reason of any breach of this Agreement by Buyer, any failure of a representation, warranty or guarantee of Buyer hereunder to be true in all material respects, the negligent acts, errors, omissions or willful misconduct incident to the performance of this Agreement on the part of Buyer, or any of the Buyer's officers, agents, employees, or subcontractors of any tier, except to the extent caused by the gross negligence or willful misconduct of any such Buyer Indemnitee. Any liability of Buyer shall be limited to the lesser of the extent of actual coverage and coverage limits of Buyer's insurance policies or the minimum insurance requirements for Seller described in Appendix E.

(c) **Notice.** The Parties shall give each other prompt notice of the making of any claim or the commencement of any action, suit or proceeding covered by the provisions of this Section 12.19.

(d) **Damage or Destruction.** If there is a casualty event or other event causing the destruction of the Facility that renders the Facility incapable of generating 50% or more of the Contract Capacity, Seller shall, within four (4) months of such event, enter into a contract for the design of a replacement facility designed to be capable of satisfying the obligations of Seller under this Agreement.

(e) **Insurance.** Seller shall obtain and maintain the Insurance coverages listed in Appendix E.

(f) **Condemnation or Other Taking.** Throughout the Agreement Term, Seller shall immediately notify buyer of the institution of any proceeding for the condemnation or other taking of the Facility, the Facility assets, or any portion thereof, including the occurrence of any hearing associated therewith. Buyer may participate in any such proceeding and Seller shall deliver to Buyer all instruments necessary or required by Buyer to permit such participation. Without Buyer's prior written consent, Seller (i) shall not agree to any compensation or award, and (ii) shall not take any action or fail to take any action which would cause the compensation to be determined.

(g) **Limitation of Liability.** EXCEPT TO THE EXTENT INCLUDED IN THE LIQUIDATED DAMAGES, INDEMNIFICATION OBLIGATIONS RELATED TO THIRD PARTY CLAIMS, OR OTHER SPECIFIC CHARGES EXPRESSLY PROVIDED FOR HEREIN, IN NO EVENT SHALL EITHER PARTY OR ITS INDEMNITEES, BE LIABLE FOR SPECIAL, INCIDENTAL, EXEMPLARY, INDIRECT, PUNITIVE OR CONSEQUENTIAL DAMAGES, LOST PROFITS OR OTHER COSTS, BUSINESS INTERRUPTION DAMAGES RELATED TO OR ARISING OUT OF A PARTY'S PERFORMANCE OR NON-PERFORMANCE OF THIS AGREEMENT, WHETHER BASED ON OR CLAIMED UNDER STATUTE, CONTRACT, TORT (INCLUDING SUCH PARTY'S OWN NEGLIGENCE) OR ANY OTHER THEORY OF LIABILITY AT LAW OR IN EQUITY. IT IS THE INTENT OF THE PARTIES THAT THE LIMITATIONS HEREIN IMPOSED ON REMEDIES AND THE MEASURE OF DAMAGES BE WITHOUT REGARD TO THE CAUSE OR CAUSES OF SUCH DAMAGES, INCLUDING THE NEGLIGENCE OF ANY PARTY, WHETHER SUCH NEGLIGENCE BE SOLE, JOINT, CONTRIBUTORY, CONCURRENT, OR ACTIVE OR PASSIVE. THE PARTIES HEREBY WAIVE ANY RIGHT TO CONTEST SUCH PAYMENTS AS AN UNREASONABLE PENALTY.

(h) To the extent any damages required to be paid hereunder are liquidated, the Parties acknowledge that the damages are difficult or impossible to determine, and that the liquidated damages constitute a reasonable approximation of the anticipated harm or loss.

(i) Regardless of the indemnitees provided in Section 12.19(a) of this Agreement, Seller shall defend and indemnify Buyer regarding the Scheduling and dispatch actions performed by Buyer in accordance with Article VI and Appendix C of this Agreement.

Section 12.20 Severability. In the event any of the terms, covenants or conditions of this Agreement, or the application of any such terms, covenants or conditions, shall be held invalid, illegal or unenforceable by any court having jurisdiction, all other terms, covenants and conditions

of this Agreement and their application not adversely affected thereby shall remain in force and effect, *provided* that the remaining valid and enforceable provisions materially retain the essence of the Parties' original bargain.

Section 12.21 Confidentiality.

(a) The Parties will keep confidential all confidential or trade secret information made available to them in connection with this Agreement, to the extent possible, consistent with applicable laws, including the California Public Records Act. Confidential or trade secret information shall be marked or expressly identified as such ("***Confidential Information***").

(b) Notwithstanding the foregoing or any other provision of this Agreement, the Parties acknowledges that Buyer and Seller are subject to disclosure as required by the California Public Records Act, Cal. Govt. Code §§ 6250 et seq. ("***CPRA***") and the Ralph M. Brown Act, Cal. Govt. Code §§ 54950 et seq. ("***Brown Act***").

(c) If a Party ("Receiving Party") receives a request from a Third Party for access to, or inspection, disclosure or copying of, any of the other Party's (the "Supplying Party") confidential data or information ("Disclosure Request"), then the Receiving Party shall provide notice and a copy of the Disclosure Request to the Supplying Party within three (3) Business Days of receipt of the Disclosure Request. Within three (3) Business Days of receipt of such notice, the Supplying Party shall provide notice to the Receiving Party either:

(i) that the Supplying Party believes there are reasonable legal grounds for denying or objecting to the Disclosure Request, and the Supplying Party requests the Receiving Party to deny or object to the Disclosure Request with respect to identified confidential information. In such case, the Receiving Party shall deny the Disclosure Request and the Supplying Party shall defend the denial of the Disclosure Request at its sole cost, and it shall indemnify the Receiving Party for all costs associated with denying or objecting to the Disclosure Request. Such indemnification by the Supplying Party of the Receiving Party shall include all of the Receiving Party's costs reasonably incurred with respect to denial of or objection to the Disclosure Request, including but not limited to costs, penalties, attorney's fees awarded against the Receiving Party and the Receiving Party's attorney's fees; or

(ii) the Receiving Party may grant the Disclosure Request without any liability by the Receiving Party to the Supplying Party.

Section 12.22 Mobile-Sierra. The Parties hereby stipulate and agree that this Agreement was entered into as a result of arm's-length negotiations between the Parties. Further, the Parties believe that, to the extent the sale of Energy under this Agreement is subject to Sections 205 and 206 of the Federal Power Act, 16 U.S.C. Sections 824d and 824e, the rates, terms and conditions of this Agreement are just and reasonable within the meanings of Sections 205 and 206 of the Federal Power Act, and that the rates, terms and conditions of this Agreement will remain so during the Agreement Term. Notwithstanding any provision of this Agreement, the Parties waive all rights to challenge the validity of this Agreement or whether it is just and reasonable for and with

respect to the Agreement Term, under Sections 205 and 206 of the Federal Power Act, and to request the FERC to revise the terms and conditions and the rates or services specified in this Agreement, and hereby agree not to seek, nor support any third party in seeking, to prospectively or retroactively revise the rates, terms or conditions of this Agreement through application or complaint to FERC or any other state or federal agency, board, court or tribunal, related in any manner as to whether such rates, terms or conditions are just and reasonable or in the public interest under the Federal Power Act, absent prior written agreement of the Parties. The Parties also agree that, absent prior agreement in writing by the Parties to a proposed change, the standard of review for changes to any rate, charge, classification, term or condition of this Agreement, whether proposed by a Party (to the extent that any provision of this Section is unenforceable or ineffective as to such Party), a non-party or the FERC acting *sua sponte* shall be the "public interest" application of the "just and reasonable" standard of review that requires FERC to find an "unequivocal public necessity" or "extraordinary circumstances where the public will be severely harmed" to modify a contract, as set forth in *United Gas Pipe Line Co. v. Mobile Gas Service Corp.,* 350 U.S. 332 (1956) and *Federal Power Commission v. Sierra Pacific Power Co.,* 350 U.S. 348 (1956), and clarified by *Morgan Stanley Capital Group, Inc. v. Public Util. Dist. No. 1 of Snohomish,* 554 U.S. 527 at 550-51 (2008) and *NRG Power Marketing, LLC v. Maine Public Utilities Comm'n,* 558 U.S. 165 (2010).

Buyer and Seller were represented by legal counsel during the negotiation and execution of this Agreement and the Parties have executed this Agreement as of the dates set forth below, effective as of the Effective Date.

BUYER:

NORTHERN CALIFORNIA POWER AGENCY

By: Randy S. Howard
Its: General Manager
Date:

Approved as to Form:

By:
Its: General Counsel
Date:

SELLER:

SOUTH FEATHER WATER AND POWER AGENCY

_____

By:_____

Its:_____

Date:_____

Approved as to Form:

_____

By:_____

Its: General Counsel

Date:_____

APPENDIX A
TO POWER PURCHASE AGREEMENT,
DATED AS OF [_____], 20[__]
BETWEEN
NORTHERN CALIFORNIA POWER AGENCY
AND
SOUTH FEATHER WATER AND POWER AGENCY

CONTRACT PRICE

Buyer shall compensate Seller for the Product in accordance with this Appendix A.

For the period beginning on the Initial Delivery Date through 11:59 pm on December 31, 2021, the Contract Price of the Product shall be equal to $35.00/MWh.

For the Delivery Term after 11:59 pm on December 31, 2021, the Contract Price of the Product shall be as described below:

1) Contract Price. The Contract Price of the Product shall be equal to the Fixed Monthly Payment plus the Variable Output Monthly Payment, as further described herein:

   i. The Fixed Monthly Payment ("**Fixed Monthly Payment**") Buyer shall pay to Seller each calendar month during the Delivery Term, subject to the terms of this Agreement, shall be equal to RA Capacity Monthly Payment ("**RA Capacity Monthly Payment**") plus Base Output Monthly Payment, calculated as follows:

      1. RA Capacity Monthly Payment = Facility Monthly Net Qualifying Capacity * RA Capacity Rate

         Where RA Capacity Rate is $6.25 per kW-month

      2. Base Output Monthly Payment

         For each full Contract Year, Buyer shall pay to Seller Six Million Seven Hundred Twenty Six Thousand Seven Hundred Twenty Dollars ($6,726,720.00) ("**Base Output Compensation**") in twelve equal monthly installments ("**Base Output Monthly Payment**"). The Base Output Monthly Payment represents Buyer's prepayment for the initial 192,192.00 MWh of Facility Energy plus Deemed Generated Energy ("**Base Output**") produced by the Facility during each Contract Year. Base Output is assumed to be produced each calendar month as shown in Table A below ("**Monthly Base Output**"):

Table A – Base Output

Calendar Month	Monthly Base Output (MWh)	Base Output Monthly Payment
January	16,016.00	$ 560,560.00
February	16,016.00	$ 560,560.00
March	16,016.00	$ 560,560.00
April	16,016.00	$ 560,560.00
May	16,016.00	$ 560,560.00
June	16,016.00	$ 560,560.00
July	16,016.00	$ 560,560.00
August	16,016.00	$ 560,560.00
September	16,016.00	$ 560,560.00
October	16,016.00	$ 560,560.00
November	16,016.00	$ 560,560.00
December	16,016.00	$ 560,560.00
Total	192,192.00	$ 6,726,720.00

ii. The Variable Output Monthly Payment ("**Variable Output Monthly Payment**") Buyer shall pay to Seller each calendar month during the Delivery Term, subject to the terms of this Agreement, shall be calculated as follows:

1. Variable Output Monthly Payment

During each full Contract Year, Buyer shall compensate Seller for each MWh of Facility Energy produced in excess of Base Output ("**Variable Output**") multiplied by the Variable Output Rate. For example, if during a full Contract Year the Facility produced 477,369.00 MWh of Facility Energy, Buyer would pay to Seller $9,690,314.46 ((477,369.00 MWh – 192,192.00 MWh) * $33.98/MWh) for Variable Output produced for that full Contract Year. Buyer and Seller acknowledge that actual month Facility production is variable, whereby the amount of Facility Energy produced each calendar month may be greater than, or less than, Monthly Base Output; therefore, Buyer and Seller shall calculate the Variable Output Monthly Payment amount adjusted for a monthly true-up calculation to account for actual monthly Facility Energy production, as follows:

Variable Output Monthly Payment = Facility Monthly Variable Output * Variable Output Rate; where:

a. Variable Output Rate is $33.98 per MWh; and

b. Facility Monthly Variable Output ("**Facility Monthly Variable Output**") is equal to the amount of Facility Energy produced each calendar month that is in excess to the amount of Monthly Base Output anticipated to be produced for the same calendar month, as reflected in Table A of this Appendix A; provided, however, if the amount of Facility Energy produced during a calendar month is less than the amount of Monthly Base Output anticipated to be produced for the same calendar month, as reflected in Table A of this Appendix A, Monthly Variable Output shall be zero MWh, and the amount of Monthly Base Output that is greater than the amount of Facility Energy produced during a calendar month shall be "rolled forward" and added to the amount of Monthly Base Output anticipated to be produced in the next succeeding calendar month ("**Variable Output True-up**"), for the purpose of calculating Facility Monthly Variable Output for the next succeeding calendar month. For the purpose of clarity, the following examples of the Variable Output True Up calculation are provided below:

Variable Output True-Up Example A

Calendar Month	Facility Energy (MWh)	Monthly Base Output (MWh)	Deemed Generated Energy (MWh)	Variable Output True-Up (MWh)	Facility Monthly Variable Output (MWh)	Variable Output Rate ($/MWh)	Facility Output Monthly Payment
January	30,000.00	16,016.00	-	-	13,984.00	$ 33.98	$ 475,176.32
February	15,000.00	16,016.00	-	1,016.00	-	$ 33.98	$ -
March	30,000.00	17,032.00	-	-	12,968.00	$ 33.98	$ 440,652.64
April	30,000.00	16,016.00	-	-	13,984.00	$ 33.98	$ 475,176.32

Variable Output True-Up Example B

Calendar Month	Facility Energy (MWh)	Monthly Base Output (MWh)	Deemed Generated Energy (MWh)	Variable Output True-Up (MWh)	Facility Monthly Variable Output (MWh)	Variable Output Rate ($/MWh)	Facility Output Monthly Payment
January	30,000.00	16,016.00	-	-	13,984.00	$ 33.98	$ 475,176.32
February	15,000.00	16,016.00	-	1,016.00	-	$ 33.98	$ -
March	15,000.00	17,032.00	-	2,032.00	-	$ 33.98	$ -
April	30,000.00	18,048.00	-	-	11,952.00	$ 33.98	$ 406,128.96

Variable Output True-Up Example C

Calendar Month	Facility Energy (MWh)	Monthly Base Output (MWh)	Deemed Generated Energy (MWh)	Variable Output True-Up (MWh)	Facility Monthly Variable Output (MWh)	Variable Output Rate ($/MWh)	Facility Output Monthly Payment
January	30,000.00	16,016.00	-	-	13,984.00	$ 33.98	$ 475,176.32
February	30,000.00	16,016.00	-	-	13,984.00	$ 33.98	$ 475,176.32
March	30,000.00	16,016.00	-	-	13,984.00	$ 33.98	$ 475,176.32
April	30,000.00	16,016.00	-	-	13,984.00	$ 33.98	$ 475,176.32

A final annual true-up credit ("**Annual True-Up Credit**") will be calculated at the end of each Calendar Year and paid by Seller to Buyer to account for any outstanding Variable Output True-Up amount, if any, as follows:

Annual True-Up Credit = Outstanding Variable Output True-Up amount * Variable Output Rate

For the purpose of clarity, an example of the Annual True-Up Credit calculation is provided below:

Annual True-Up Credit Example

Calendar Month	Facility Energy (MWh)	Monthly Base Output (MWh)	Deemed Generated Energy (MWh)	Variable Output True-Up (MWh)	Facility Monthly Variable Output (MWh)	Variable Output Rate ($/MWh)	Facility Output Monthly Payment
November	30,000.00	16,016.00	-	-	13,984.00	$ 33.98	$ 475,176.32
December	15,000.00	16,016.00	-	1,016.00	-	$ 33.98	$ -

Annual True-Up Credit = 1,016.00 MWh * $33.98 = $34,523.68

Notwithstanding the Monthly Variable Output True-Up and Annual True-Up described in this Appendix A, if the Facility produces a total amount of Facility Energy during a Calendar Year that is less than Base Output, Buyer's obligation to pay Seller total Base Output Compensation in a Calendar Year shall not be reduced.

APPENDIX B
TO POWER PURCHASE AGREEMENT,
DATED AS OF [_____], 20[__]
BETWEEN
NORTHERN CALIFORNIA POWER AGENCY
AND
SOUTH FEATHER WATER AND POWER AGECY

FACILITY DESCRIPTION

The Facilities of the South Feather Power Project are located in Butte County on the South Feather river and include:

1. Name of Facility: South Feather Power Project
2. Location:

   Kelly Ridge Powerhouse: 39°31'54.4"N 121°29'28.6"W

   Forbestown Powerhouse: 39°33'03.4"N 121°16'43.3"W

   Woodleaf Powerhouse: 39°33'14.0"N 121°12'15.0"W

   Sly Creek Powerhouse: 39°34'49.5"N 121°07'10.1"W

3. Description of Facilities:

Facility Name	Contract Capacity (MW)	CAISO Resource ID	PNode	CEC RPS ID
Forbestown	37.5	FORBST_7_UNIT 1	FORBSTWN_7_B1	N/A
Kelly Ridge	11.0	KELYRG_6_UNIT	KELLYRDG_7_B1	60266
Sly Creek	13.0	SLYCRK_1_UNIT 1	SLYCREEK_7_B1	60267
Woodleaf	60.0	WDLEAF_7_UNIT 1	WOODLEAF_7_B1	N/A

2. Owner: South Feather Water and Power Agency
3. Operator: Seller
4. Scheduling Coordinator: Buyer

4. Point of Interconnection: The Point of Interconnection for each Facility shall mean the point, as set forth in this Appendix B and the Interconnection Agreement, where the Interconnection Facilities connect to the Transmission Providers Transmission System. The Point of Interconnection for each Facility is further described herein:

WOODLEAF POWERHOUSE, SLY CREEK POWERHOUSE, AND FORBESTOWN POWERHOUSE POINTS OF INTERCONNECTION

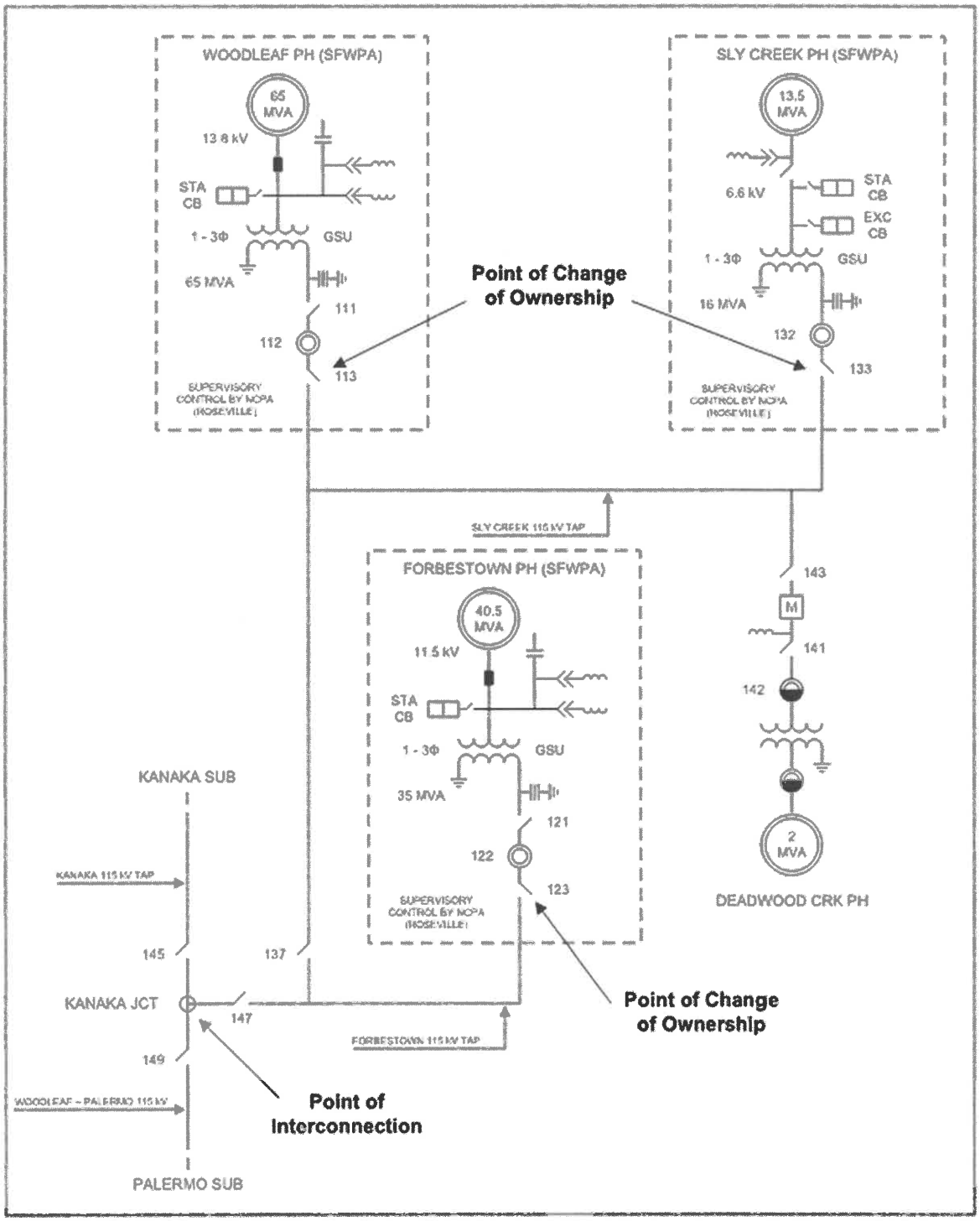

Figure 1. 115 kV Single Line Diagram

KELLY RIDGE POWERHOUSE POINTS OF INTERCONNECTION

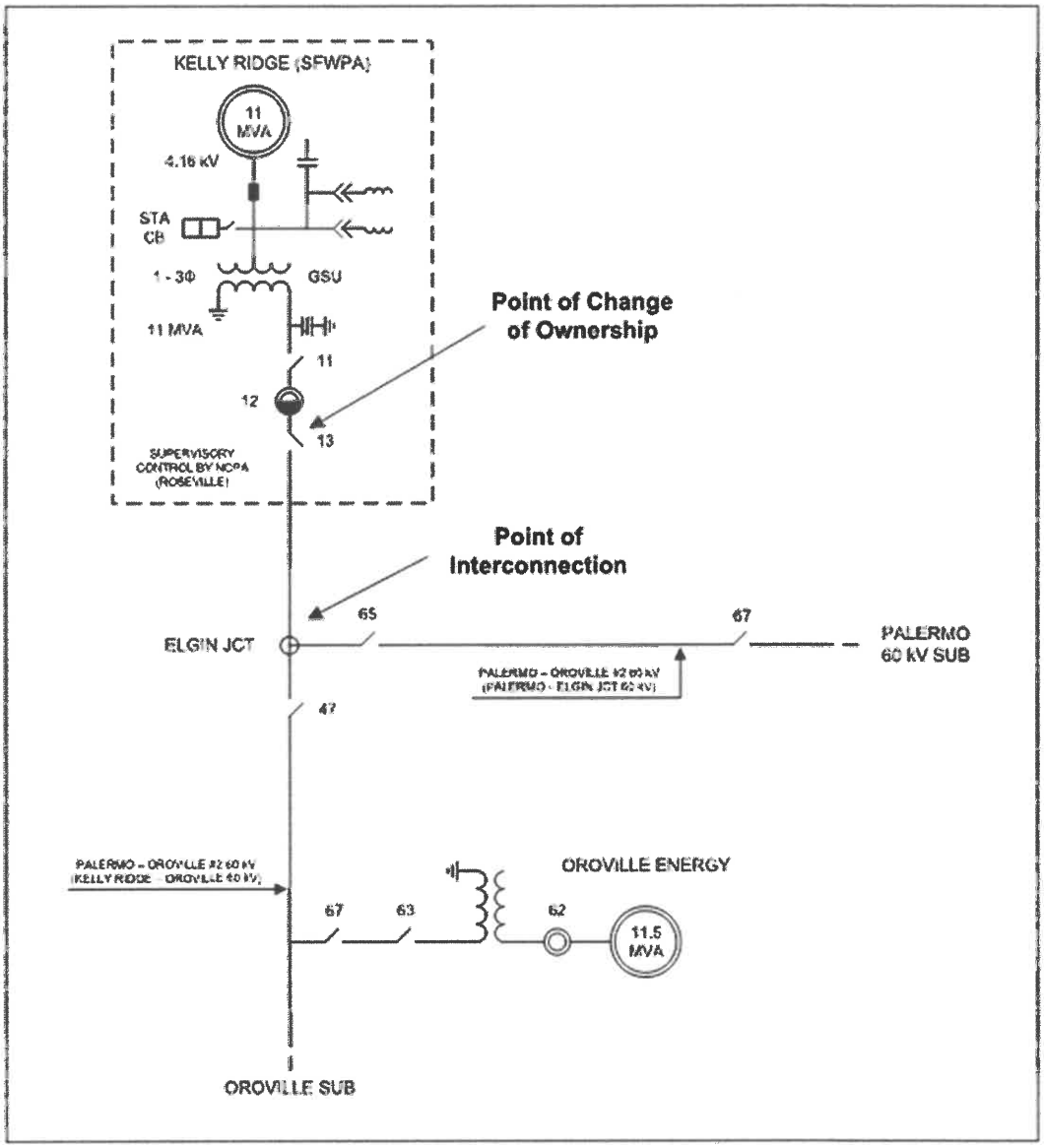

Figure 2. 60 kV Single Line Diagram

APPENDIX C
TO POWER PURCHASE AGREEMENT,
DATED AS OF [_____], 20[__]
BETWEEN
NORTHERN CALIFORNIA POWER AGENCY
AND
SOUTH FEATHER WATER AND POWER AGENCY

SCHEDUING AND OPERATING PROCEDURES

1. Scheduling and Operating Procedures

The Scheduling and operating procedures are separately attached to this Appendix C, and are listed below:

SFPP-PM-101 – Voice and Data Communications

SFPP-PM-102 – Outage Management and Operational Reliability Data

SFPP-PM-104 – Dispatch Center Switching and Clearance Procedure

SFPP-PM-107 – Event Reporting Operating Plan

SFPP-PM-108 – Operating Instructions and Emergency Assistance

SFPP-PM-302 – Voltage Control, Automatic Voltage Regulator and Power System Stabilizer Operations

SFPP-PM-304 – Project Operations and Control

SFPP-PM-401 – Scheduling and Bidding

APPENDIX D
TO POWER PURCHASE AGREEMENT,
DATED AS OF [_____], 20[__]
BETWEEN
NORTHERN CALIFORNIA POWER AGENCY
AND
SOUTH FEATHER WATER AND POWER AGENCY

FORM OF ATTESTATION

_____(Seller)_____ **Environmental Attribute Attestation and Bill of Sale**

_____ ("Seller") hereby sells, transfers and delivers to Northern California Power Agency ("Buyer") the Environmental Attributes and Environmental Attribute Reporting Rights associated with the generation from the Facility described below:

Facility name and location:
Fuel Type: Capacity (MW):_____ Operational Date:
As applicable: CEC Reg. no. ___ Energy Admin. ID no. ____ Q.F. ID no. ___

Dates	MWhs generated
_____ 20__	_____
_____ 20__	_____
_____ 20__	_____

in the amount of one Environmental Attribute or its equivalent for each MWh generated.

Seller further attests, warrants and represents as follows:

i) the information provided herein is true and correct;

ii) its sale to Buyer is its one and only sale of the Environmental Attributes and associated Environmental Attribute Reporting Rights referenced herein;

iii) the Facility generated and delivered to the grid the Energy in the amount indicated as undifferentiated Energy; and

iv) Seller owns the Facility and each of the Environmental Attributes and Environmental Attribute Reporting Rights associated with the generation of the indicated Energy for delivery to the grid have been generated and sold by the Facility.

This serves as a bill of sale, transferring from Seller to Buyer all of Seller's right, title and interest in and to the Environmental Attributes and Environmental Attribute Reporting Rights associated with the generation of the Energy for delivery to the grid.

Contact Person/telephone: _____

APPENDIX E
TO POWER PURCHASE AGREEMENT,
DATED AS OF [_____], 20[__]
BETWEEN
NORTHERN CALIFORNIA POWER AGENCY
AND
SOUTH FEATHER WATER AND POWER AGENCY

INSURANCE

I. GENERAL REQUIREMENTS

Within ten (10) days after the Effective Date, Seller shall furnish Buyer evidence of commercial automobile liability, commercial general liability, excess liability, and workers' compensation coverage meeting the requirements set forth in this Appendix E from insurers acceptable to Buyer and in a form acceptable to the risk management of Buyer or acceptable to Buyer's agent for this purpose. Such insurance shall be maintained by Seller at Seller's sole cost and expense.

Such insurance shall not limit or qualify the liabilities and obligations of Seller assumed under this Agreement. Buyer shall not by reason of its inclusion under these policies incur liability to the insurance carrier for payment of premium for these policies.

Any insurance carried by Buyer which may be applicable shall be deemed to be excess insurance and Seller's insurance is primary for purposes under this Agreement despite any conflicting provision in Seller's policies to the contrary.

Such insurance shall not be canceled or reduced in coverage or amount without first giving thirty (30) days' prior notice thereof (ten (10) days for non-payment of premium) by registered mail to General Manager, Northern California Power Agency.

Should any portion of the required insurance be on a "Claims Made" policy, Seller shall, at the policy expiration date following completion of work, provide evidence that the "Claims Made" policy has been renewed or replaced with the same limits, terms and conditions of the expiring policy, or that an extended discovery period has been purchased on the expiring policy at least for the contract under which the work was performed.

II. SPECIFIC COVERAGES REQUIRED

A. Commercial Automobile Liability

Seller shall provide Commercial Automobile Liability insurance which shall include coverages for liability arising out of the use of owned (if applicable), non-owned, and hired vehicles for performance of the work by Seller or its officers, agents, or employees, as required, to be licensed under the California or any other applicable state vehicle code. The Commercial Automobile Liability insurance shall have not less than $1,000,000.00 combined single limit per occurrence, with a self-insured retention or deductible of no more than $100,000, and shall apply to all operations of Seller.

The Commercial Automobile Liability policy shall include Buyer, its members, and their officers, agents, and employees while acting within the scope of their employment, as additional insureds with Seller, and shall insure against liability for death, bodily injury, or property damage resulting from the performance of this Agreement by Seller or its officers, agents, or employees. The evidence of insurance shall be a form acceptable to Buyer's risk manager.

B. Commercial General Liability

Seller shall provide Commercial General Liability insurance with Blanket Contractual Liability, Independent Contractors, Broad Form Property Damage, Premises and Operations, Products and Completed Operations, fire, Legal Liability and Personal Injury coverages included. Such insurance shall provide coverage for total limits actually arranged by Seller, but not less than $10,000,000.00 combined single limit per occurrence. Should the policy have an aggregate limit, such aggregate limits should not be less than double the Combined Single Limit. Umbrella or Excess Liability coverages may be used to supplement primary coverages to meet the required limits. Evidence of such coverage shall be a form acceptable to Buyer's risk manager, and shall provide for the following:

1. Include Buyer and its members, and their respective officers, agents, and employees as additional insureds with the Named Insured for the activities and operations of Seller and its officers, agents, or employees under this Agreement.

2. Severability-of-Interest or Cross-Liability Clause such as: "The policy to which this endorsement is attached shall apply separately to each insured against whom a claim is made or suit is brought, except with respect to the limits of the company's liability."

3. A description of the coverages included under the policy.

C. Excess Liability

Seller may use an Umbrella or Excess Liability Coverage to meet coverage limits specified in this Agreement. Seller shall require the carrier for Excess Liability to properly schedule

and to identify the underlying policies on an endorsement to the policy acceptable to Buyer's risk management agent. Such policy shall include, as appropriate, coverage for Commercial General Liability, Commercial Automobile Liability, Employer's Liability, or other applicable insurance coverages.

D. Workers' Compensation/Employer's Liability Insurance

Seller shall provide Workers' Compensation insurance covering all of Seller's employees in accordance with the laws of any state in which the work is to be performed and including Employer's Liability insurance and a Waiver of Subrogation in favor of Buyer. The limit for Employer's Liability coverage shall be not less than $1,000,000.00 each accident and shall be a separate policy if not included with Workers' Compensation coverage. Evidence of such insurance shall be a form of Buyer Special Endorsement of insurance or on an endorsement to the policy acceptable to Buyer's risk management agent. Workers' Compensation/Employer's Liability exposure may be self-insured *provided* that Buyer is furnished with a copy of the certificate issued by the state authorizing Seller to self-insure. Seller shall notify Buyer's risk manager by receipted delivery as soon as possible of the state withdrawing authority to self-insure.

APPENDIX F
TO POWER PURCHASE AGREEMENT,
DATED AS OF [_____], 20[__]
BETWEEN
NORTHERN CALIFORNIA POWER AGENCY
AND
SOUTH FEATHER WATER AND POWER AGENCY

AUTHORIZED REPRESENTATIVES;
BUYER AND SELLER BILLING, NOTIFICATION AND
SCHEDULING CONTACT INFORMATION

1. **Authorized Representative.** The initial Authorized Representatives of Buyer and Seller pursuant to Section 14.1 are as follows:

1.1 Buyer:

Northern California Power Agency
c/o: General Manager
651 Commerce Drive
Roseville, CA 95678

Telephone: 916-781-3636
Facsimile: 916-783-7693
Email: _____

1.2 Seller:

RESERVED

2. **Billings.** Billings and payments pursuant to Article IX and Appendix A shall be transmitted to the following addresses:

2.1 If Billing to Buyer:

Northern California Power Agency
Attention: Settlements
Telephone: 916-781-3636
Facsimile: 916-781-4255
Email: settlements@ncpa.com; acctspayable@ncpa.com

2.2 If Payment to Buyer:

Northern California Power Agency
Attention: Accounts Payable

Telephone: 916-781-4211
Facsimile: 916-781-4255
Email: Acctspayable@ncpa.com

2.3 If Payment or Billing to Seller:

RESERVED

3. **Notices.** Unless otherwise specified by Buyer all notices (other than Scheduling notices, curtailment notices, and Deemed Generated Energy notices):

If to Buyer:

Northern California Power Agency
Attention: General Counsel
Telephone: 916-781-3636
Facsimile: 916-783-7693
Email: _____

If to Seller:

RESERVED

4. **Schedulers.** Unless otherwise specified by Buyer, all notices related to Scheduling of the Facility shall be sent to the following address:

If to Buyer:

Northern California Power Agency

Pre-scheduling: Generation schedules are to be provided to NCPA Pre-Scheduling contacts.

Name	Phone	Email
NCPA Preschedulers	916-786-0123	Preschedulers@ncpa.com
	916-786-0124	
Facsimile:	916-781-4239	

Schedule Coordination: NCPA Schedule Coordinator contacts.

Name	Phone	Email
NCPA SC	916-781-4237	SC2@ncpa.com
Facsimile:	916-781-4226	

Outage Coordination: All Planned and/or Forced Outages of generation facilities are to be provided to NCPA Dispatch and NCPA SC.

Name	Phone	Email
NCPA Dispatch	916-786-3518	Dispatch@ncpa.com
NCPA SC	916-781-4237	SC2@ncpa.com
Facsimile:	916-781-4226	

If to Seller:

RESERVED

5. **Curtailments.** All notices related to curtailments of the Facility pursuant to Section 6.5 shall be sent to the following address:

If to Buyer:

Northern California Power Agency
(see above)

If to Seller:

RESERVED

6. **Deemed Generated Energy.** Unless otherwise specified by Buyer, all notices related to calculations of Deemed Generated Energy shall be sent to the following address:

If to Buyer:

Northern California Power Agency
Attention: Settlements
Telephone: 916-781-3636
Facsimile: 916-781-4255
Email: settlements@ncpa.com

If to Seller:

RESERVED

Either Party may update its contact information in this Appendix F by delivering a notice to the other Party pursuant to Section 12.2 of the Agreement, and such change shall not be considered to be an amendment purchase to Section 12.11 of the Agreement.

24

A PUBLIC AGENCY
NCPA
NORTHERN CALIFORNIA POWER AGENCY

Commission Staff Report

COMMISSION MEETING DATE: August 26, 2021

SUBJECT: Providing additional generation for Plumas-Sierra Rural Electric Cooperative ("Plumas") including participation in Department of Water Resources Energy Procurement Program

AGENDA CATEGORY: Discussion/Action

FROM:	Luckhardt, Jane General Counsel	**METHOD OF SELECTION:** *Other*
Division:	Executive Services	*If other, please describe: Governor Newsom's direction in his emergency proclamation on July 30, 2021, which directed DWR to assist state agencies, local governments, utility companies, and others in contracting to arrange the procurement of projects likely to be online by October 31, 2021, that could expand energy supply and storage and waiving public contracting and bidding requirements.*
Department:	General Manager	

IMPACTED MEMBERS:

All Members	☒	**City of Lodi**	☐	**City of Shasta Lake**	☐
Alameda Municipal Power	☐	**City of Lompoc**	☐	**City of Ukiah**	☐
San Francisco Bay Area Rapid Transit	☐	**City of Palo Alto**	☐	**Plumas-Sierra REC**	☐
City of Biggs	☐	**City of Redding**	☐	**Port of Oakland**	☐
City of Gridley	☐	**City of Roseville**	☐	**Truckee Donner PUD**	☐
City of Healdsburg	☐	**City of Santa Clara**	☐	**Other**	☐

If other, please specify _____

_____

RECOMMENDATION:

Approve Resolution 21-86 authorizing the General Manager or his designee to award bids, execute agreements, issue purchase orders, enter into amendments to, new appendices or side agreements to the PG&E Interconnection Agreement and take all other actions necessary to provide emergency energy requirements to Plumas-Sierra Rural Electric Cooperative ("Plumas-Sierra") in the short-term and for the medium-term to develop and file license applications; secure land rights; and develop, engineer, procure, construct, operate and maintain generation resources in Plumas-Sierra' service territory materially consistent with the Term Sheet and pursuant to Governor Newsom's Proclamation of Energy Emergency and Proclamation of Dixie Fire Emergency.

This recommendation includes the following definitions:

- PG&E Interconnection Agreement: Interconnection Agreement between Pacific Gas and Electric Company (PG&E) and Northern California Power Agency (NCPA) and City of Alameda, City of Biggs, City of Gridley, City of Healdsburg, City of Lodi, City of Lompoc, City of Palo Alto, City of Ukiah and Plumas-Sierra Rural Electric Cooperative (Service Agreement No. 292 under PG&E FERC Electric Tariff Volume No. 5).

- Term Sheet: The Emergency Generation Capacity Term Sheet included as Exhibit A.

- Governor Newsom's Proclamation of Energy Emergency: Governor Newsom's emergency proclamation on July 30, 2021, Proclamation of a State of Emergency due to severe energy shortages throughout California that directed DWR to assist local governments, utility companies, and others in contracting for procurement of projects that could expand energy supply and storage.

- Governor Newsom's Proclamation of Dixie Fire Emergency: Governor Newsom's July 23, 2021 Proclamation of a State of Emergency due to the Dixie and Fly fires in Plumas County waiving public contracting and bidding requirements.

BACKGROUND:

Governor Newsom's July 23, 2021 Proclamation of Emergency recognized the significant impacts in Plumas County due to the Dixie and Fly fires. Governor Newsom found conditions of extreme peril to safety and property, and the magnitude of impacts caused by these fires to require combined forces of regions. Thus, strict compliance with various states and regulations would prevent, hinder, or delay the mitigation of the effects of these fires. Therefore, Governor Newsom suspended applicable provisions of the Government Code and Public Contract Code regarding travel, advertising, and competitive bidding requirements to the extent necessary to address the effects of these fires.

Many of PG&E's transmission lines and facilities feeding Plumas-Sierra have been significantly damaged or destroyed by the Dixie and Fly fires including the Caribou #2 – 60kV and Caribou-Plumas Jct. – 60kV. Plumas has been without connection through PG&E to the California Independent System Operator (CAISO) controlled grid since approximately 8:30 pm on July 21,

2021. PG&E's current estimates to restore service to Plumas-Sierra are between 4 and 5 months.

Governor Newsom's July 30, 2021 Proclamation of Emergency declared an energy emergency due to severe energy shortages throughout California to expedite the development and installation of energy generation resources. Governor Newsom directed the California Energy Commission (CEC) and requested the CAISO to work with California's load serving entities on accelerating plans for construction, procurement, and rapid deployment of new clean energy (including natural gas fired generators) and storage projects. Governor Newsom has directed DWR to enter into contracts for projects likely to be online by October 31, 2021, that would expand energy supply and storage. For contracts first executed through October 31, 2021, applicable provisions of the Government code and the Public Contract Code regarding travel, advertising and competitive bidding requirements are suspended. In addition, for all new emergency power generators of 10 megawatts or more, the provisions of Public Resource Code, Division 13 (commencing with Section 21000) and regulations adopted pursuant to that Division, are suspended if the CEC determines the generation is located on disturbed sites, the fuel will be natural gas, there is a secure water supply, and there is an available grid interconnection.

Currently Plumas-Sierra is relying on backup generators, a small interconnection with Nevada Energy, and member conservation to maintain power throughout its service territory. NCPA and Plumas-Sierra have identified a need for both short-term and medium-term solutions. For a short-term solution, Plumas-Sierra may obtain 5 megawatts of power including frequency and voltage control from Sierra Pacific Industries (SPI). This arrangement may require an amendment, new appendix or side agreement to the PG&E Interconnection Agreement to address islanding of Plumas-Sierra' system on SPI's generator.

For a medium-term solution and recognizing that PG&E may take more than 5 months to restore service to Plumas-Sierra, NCPA requested proposals for available new or used generators from 16 entities. NCPA received proposals from 4 entities. The best value solution came from Siemens Energy as two, 5.8 megawatt gas fired generators. NCPA and Plumas-Sierra have identified a location for the 11.6 megawatts of new gas fired generation within Plumas-Sierra' service territory on a disturbed site, with a gas supply, available water and grid interconnection.

The installation of 11.6 megawatts of new generation would be supported by Governor Newsom's Proclamation of Energy Emergency that designated DWR as the procurement entity for new generation and the supporting services needed to get that generation on line. DWR established a Term Sheet for supporting the addition of new generation. The Term Sheet specifies DWR purchase of the equipment and reimbursement for all expenses including NCPA labor and contractors to develop, procure, construct, interconnect, operate and maintain the generators. NCPA intends to enter into agreements with DWR and Plumas-Sierra for this project and consistent with the DWR program and associated Term Sheet.

FISCAL IMPACT:

The total cost of the project is roughly estimated to be $20,000,000 with DWR purchasing the equipment. As specified in the Term Sheet, DWR has also agreed to reimburse NCPA for all other project expenses including labor. Any costs incurred by NCPA related to this activity will

be recovered and reimbursed by DWR through NCPA's Pass-Through billing process. If these generators are used to support Plumas-Sierra due to the damage to PG&E's infrastructure from the Dixie and Fly fires, any charges from DWR for this energy will be recovered and reimbursed by Plumas-Sierra through the all resources bill. There is no budget impact.

ENVIRONMENTAL ANALYSIS:

This project will only be constructed if and upon determination by the CEC that it is consistent with Paragraph 10 of Governor Newsom's Proclamation of Energy Emergency. Upon CEC determination of consistency with Paragraph 10, the provisions of Public Resources Code, Division 13 (commencing with Section 21000) and regulations adopted pursuant to that Division, are suspended. The CEC will conduct any and all necessary environmental review under the provisions of Governor Newsom's Proclamation of Energy Emergency.

COMMITTEE REVIEW: On August 23, 2021 the Facilities Committee reviewed this recommendation for Commission Approval. All recommendations and any revisions to this project or this Staff Report will be presented by NCPA Staff to the Commission on August 26, 2021.

Respectfully submitted,

Martin Hall for

RANDY S. HOWARD
General Manager

Attachments:
- Appendix A
- Resolution 21-86

APPENDIX A TO STAFF REPORT 213:21

Please see attached

Emergency Generation Capacity Term Sheet

This term sheet summarizes the principal terms of the proposed transactions among the California Department of Water Resources ("**CDWR**") and the Northern California Power Agency, a California joint powers public agency organized pursuant to the Joint Exercise of Power Act (Gov Code §6500 *et seq.*) (**"NCPA"**) as described below. CDWR and NCPA are referred to individually as a "**Party**" and collectively as the "**Parties**". This term sheet is not intended to include an exhaustive list of any Party's rights or obligations and does not create any obligations on the part of any Party. All binding obligations will be set forth in one or more definitive agreements to be signed by the Parties, and no obligations are created until such definitive agreements are signed.

Transaction Overview

In order to secure additional emergency generation capacity that will be available quickly and for the next two to three years until additional long term capacity resources can be arranged, CDWR is purchasing up to 2 _____ combustion turbine generators and required generation steup-up transformer ("GSU") (all equipment collectively the "**Combustion Turbines**" or "**CTs**") from _____ ("__"), but it requires a site on which to locate the CTs and services to install the CTs, to interconnect them to the electric grid (**"Grid"**), to connect to natural gas and water supplies, to operate the CTs, schedule their output into the Grid and manage the supply of fuel necessary for operations. NCPA has access through Plumas Sierra Rural Electric Cooperative to a site that could be used for these purposes and is willing to grant CDWR a license to use that site. It also has interconnection rights and available natural gas and water interconnections that can be used to interconnect the CTs to the Grid and supply the necessary fuel. Therefore, in order to aid CDWR in accomplishing its objective of securing additional generation capacity, the Parties will enter into (1) a Site Use and Installation Agreement ("**Site Agreement**"), (2) an Operation and Maintenance Agreement ("**O&M Agreement**"), and (3) an Energy Services Agreement ("**Energy Services Agreement**") as further described below.

Site Use and Installation Agreement

Parties:	Owner: California Department of Corrections Lessee: Plumas Sierra Rural Electric Cooperative Licensee: CDWR
Site:	Owner and Lessee will grant CDWR a license to use and occupy a site ("**Site**") at the _____, in a location to be agreed upon by the Owner, Lessee and CDWR, for the installation and operation of the CTs.
Term:	From the execution date through December 31, 2023.

Installation of Combustion Turbines:	CDWR will purchase the CTs from _____ and contract with _____ or another contractor for all installation, testing and commissioning of the CTs, including connection of the CTs to the GSU and gas lines. Owner's responsibilities will be limited to (1) providing the Site for the installation of the CTs, (2) providing interconnections to the existing distribution facilities and the existing natural gas lines at the Site, (3) providing connections to portable demineralized water supply trailers, and (4) while CDWR will provide a construction manager, NCPA may monitor _____'s or other contractor's installation, testing and commissioning of the CTs on behalf of CDWR.

	The Parties acknowledge that pursuant to federal law it may also be necessary to install a selective catalytic reduction system ("**SCR**") on each of the CTs in order to meet air permit requirements. CDWR will purchase SCRs for the CTs as part of its purchase of the CTs, but the Parties acknowledge that the SCRs will not be available for installation at the time the CTs are initially installed. CDWR will be responsible for installing and commissioning, and will have GE or another contractor install, test and commission, the SCRs for each of the CTs in order to comply with air permit requirements.
Title:	CDWR will retain title to the CTs and will be responsible for all property taxes and similar taxes payable with respect to the CTs.
Permits:	Owner will use commercially reasonable efforts to obtain new permits and licenses, or amendments to existing permits and licenses, as may be necessary to install and operate the CTs as contemplated in this term sheet, including temporary operation prior to installation of the SCRs and subsequent operation after installation of the SCRs. CDWR will reimburse Owner for all third party costs incurred in applying for and/or obtaining such permits and licenses or amendments to permits and licenses, including costs of third party consultants, modeling costs, the fair market value of any emission reduction credits ("**ERCs**") owned by Owner or its affiliates to obtain such permits, licenses and amendments, and the cost of obtaining any ERCs from third parties. The Parties acknowledge that there is no certainty that such permits, licenses or amendments can be obtained and that the cost estimates provided by Owner for obtaining these permits, licenses and amendments, including the cost of third party services and ERCs, are only estimates and not a guaranty of or cap on costs payable by CDWR. Based on Paragraph 10 of the Governor's Proclamation of a State of Emergency, dated July 30, 2021, CDWR represents that the installation will not be subject to the provisions of Public Resources Code Division 13 (commencing with Section 21000) or regulations adopted pursuant to that Division. CDWR acknowledges that the CTs may be subject to regulatory operating constraints and that they will not be operated outside of those constraints.
Compensation:	CDWR will reimburse Owner for all third party costs, including, but not limited to, legal costs incurred by Owner in providing the services described in clauses (2), (3) and (4) under "Installation of Combustion Turbines" and in connection with applying for and obtaining the new or amended licenses and permits, as provided under "Permits" and such other third party costs as may be identified in the course of negotiating the definitive agreements. In addition, CDWR will pay Owner a fee ("**Fee**") of Three Million, Five Hundred Thousand Dollars ($3,500,000.00) for 2021 (prorated per quarter), Three Million, Five Hundred Thousand Dollars ($3,500,000.00) for 2022, and Three Million, Five Hundred Thousand Dollars ($3,500,000.00) for 2023. The Fee for 2021 will be payable upon execution of the definitive agreements, and the Fee for 2022 and 2023 will be payable on January 1, 2022 and January 1, 2023, respectively or as may be agreed upon by the Parties.

Removal of CTs on Termination:	Unless Owner wishes to purchase the CTs, at the end of the Term or upon an earlier termination of the Site Agreement, CDWR will decommission the CTs and have them removed from the Site by the end of the Term or within 30 days after any earlier termination. Owner's obligations will be limited to disconnecting the CTs from the GSU, natural gas lines and demineralized water supply.
Events of Default:	The Site Agreement will include customary events of default (following agreed notice and cure periods), including for non-payment of amounts due and breaches of covenants and representations, and remedies.
Termination Rights:	In addition to rights to terminate following events of default, Owner will have the right to terminate the Site Agreement if (a) it is unable to obtain the necessary permits and licenses or amendments to permits and licenses necessary to install and/or operate the CTs for the Term of the Site Agreement, (b) it reasonably determines that installation or operation of the CTs will adversely impact its ability to operate the _____(Plumas' Cogeneration) in any material respect, including as a result of limitations on air emissions, natural gas consumption or hours of operation, (c) it reasonably expects that it or any of its affiliates or employees will incur liabilities or expenses of any kind that cannot or will not be fully covered by CDWR's indemnification obligations, or (d) it reasonably determines that installation or operation of the CTs will result in the violation of any applicable laws or permits, including any laws or permits related to the operation of the _____, for any reason other than the gross negligence or willful misconduct Owner or the Operator under the O&M Agreement, including failure to timely provide the SCRs. Upon the exercise of any such termination right, CDWR will pay Owner a termination fee of _____ in consideration of the work performed by Owner in seeking new or amended permits and licenses, preparing the Site for delivery and installation of the CTs, testing and repair of existing equipment and other work done by Owner in connection with the Site Agreement.
Indemnification Obligations:	In addition to customary indemnification obligations for breach of covenants or representations and for injuries to third parties or property, and without limiting CDWR's other payment and reimbursement obligations, to the extent allowed by law, CDWR will indemnify, defend, save and hold harmless Owner, and it's officers, agents and employees against all claims, expenses and liabilities arising out of (a) any challenges to or invalidation of any new or amended permits or licenses sought or obtained by Owner or any of its affiliates in connection with the installation or operation of the CTs, including legal expenses, expert fees and court costs, (b) any claims, assertions or determinations, including those based on non-compliance with the requirements of Public Resources Code Division 13 (commencing with Section 21000) or regulations adopted pursuant to that Division, that installation or operation of the CTs pursuant to any new or amended permits or licenses were illegal or not permitted by applicable law for any reason, including any fines, penalties or other

	sanctions and any costs of modifying or removing the CTs, (c) greenhouses gases, including any penalties, offset requirements, taxes and compliance costs, and (d) any environmental damage, costs or liabilities, including claims or monetary enforcement sanctions, costs and liabilities for cleanup or disposal of hazardous materials or for air emissions, arising from the installation, commissioning, operation or decommissioning of the CTs, except to the extent arising from Owner's gross negligence or willful misconduct.
Insurance:	CDWR will obtain and maintain property insurance or provide proof of self-insurance on the CTs and all related equipment for their full replacement cost. Owner and CDWR will each obtain and maintain general liability insurance and such other insurance as they may agree in amounts to be agreed or may provide proof of self-insurance.
Limited Recourse:	Except for gross negligence or willful misconduct, the liability of Owner under the Site Agreement in any year will be limited to the amount of the Fee payable in such year. No Party will be liable to another Party for consequential or punitive damages.
Purchase Option:	Anytime following the completion of the first year of the Site Agreement, Owner may notify CDWR of its intent to purchase one or both of the CTs, at the end of the term of the contract between State and NCPA, at a price equal to 70% of the estimated equipment value of +/- $__M per unit, minus $__M per unit for avoided decommissioning costs, and minus an additional $__M of avoided decommissioning administration costs, whether NCPA chooses to buy one or two units. The parties acknowledge that this calculation equates to a total purchase cost to NCPA of $__M for the first unit and $__M for the second unit.

Operation and Maintenance Agreement

Parties:	Equipment Owner: CDWR Operator: NCPA
Services:	Operator will operate the CTs in accordance with the operating schedules set under the Energy Services Agreement. All scheduled and unscheduled maintenance on the CTs and all warranty work will be performed by GE or another contractor retained by CDWR. Operator will assist CDWR in administering GE's and/or such other contractor's maintenance and warranty work on behalf of CDWR, but any actions required to enforce or pursue any warranties or remedies for deficient work or services by GE or such other contractor will constitute additional services for which additional compensation will be paid, or will be undertaken by CDWR. Operator will also not be required to institute or defend any litigation, arbitration or similar remedies against GE or such other contractor on behalf of CDWR, all of which will be done by CDWR in its own name. Operator will not guarantee the output, heat rate, efficiency

	or any other operational parameter of the CTs. CDWR will look solely to GE or such other contractor for any such guarantees.
Term:	From completion of commissioning of the CTs through the earlier of the start of decommissioning or the termination of the Site Agreement
Compensation:	Operator will receive a management fee of Three Hundred Thousand Dollars ($300,000.00) for each calendar year (or part thereof) during the Term, payable in advance at the beginning of each calendar year. CDWR will also reimburse Operator for all fixed and variable operating costs, including the cost of materials (such as consumables, spare parts and demineralized water) supplied by Operator. The Fee for 2021 will be payable upon execution of the definitive agreements, and the Fee for 2022 and 2023 will be payable on January 1, 2022 and January 1, 2023, respectively, or as may be agreed upon by the Parties.
Events of Default:	The O&M Agreement will include customary events of default (following agreed notice and cure periods), including for non-payment of amounts due and breaches of covenants and representations, and remedies.
Indemnification Obligations:	In addition to customary indemnification obligations for breach of covenants or representations and for injuries to third parties or property, and without limiting CDWR's other payment and reimbursement obligations, to the extent allowed by law, CDWR will indemnify, defend, save and hold harmless Operator, and it's officers, agents and employees against all claims, expenses and liabilities arising out of (a) any challenges to or invalidation of any new or amended permits or licenses sought or obtained by Operator or any of its affiliates in connection with the installation or operation of the CTs, including legal expenses, expert fees and court costs, (b) any claims, assertions or determinations, including those based on non-compliance with the requirements of Public Resources Code Division 13 (commencing with Section 21000) or regulations adopted pursuant to that Division, that installation or operation of the CTs pursuant to any new or amended permits or licenses were illegal or not permitted by applicable law for any reason, including any fines, penalties or other sanctions and any costs of modifying or removing the CTs, (c) greenhouses gases, including any penalties, offset requirements, taxes and compliance costs, and (d) any environmental damage, costs or liabilities, including claims or monetary enforcement sanctions, costs and liabilities for cleanup or disposal of hazardous materials or for air emissions, arising from the installation, commissioning, operation or decommissioning of the CTs, except to the extent arising from Operator's gross negligence or willful misconduct.
Insurance:	CDWR will obtain and maintain property insurance or provide proof of self-insurance on the CTs and all related equipment for their full replacement cost. CDWR and Operator will each obtain and maintain general liability insurance and such other insurance as they may agree in amounts to be agreed or may provide proof of self-insurance.

Limited Recourse:	Except for gross negligence or willful misconduct, the liability of Operator and its affiliates under the O&M Agreement in any year will be limited to the amount of the management fee payable in such year. No Party will be liable to another Party for consequential or punitive damages.

Energy Services Agreement

Parties:	Owner: CDWR Service Provider: NCPA
Scheduling Coordinator:	NCPA will act as CDWR's scheduling coordinator for the CTs and will schedule them in accordance with CDWR's instructions, subject to notice requirements to be agreed in the Energy Services Agreement. NCPA will not have any obligation to schedule or dispatch the CTs except in accordance with instructions from CDWR or the CAISO. However, NCPA will not be required to schedule the CTs in any manner that violates any applicable permit or law, that would violate GE's warranty or operating recommendations, or that would adversely affect NCPA's ability to operate and dispatch the _____. CDWR will cooperate with NCPA and take all actions necessary for NCPA to be designated as scheduling coordinator. CDWR will be entitled to receive all CAISO and other revenues related to the capacity or output of the CTs and will be responsible for all CAISO fees, charges, penalties, imbalance charges or penalties and, if applicable, resource adequacy replacement costs and shortfall charges.
Potential Operating Model Change	The Parties agree that the Units may be placed under operational constraints until any SCRs that may be required can be installed and commissioned. In that event, the Parties recognize and agree that once the SCRs have been commissioned, a different operating model may produce greater benefit to the people of the State of California. Accordingly, the Parties agree to confer to discuss changing circumstances and may agree to modifications to the operating model set forth in this Agreement.
Fuel Management:	NCPA will act as CDWR's fuel manager and will nominate and arrange for the delivery of fuel to the CTs necessary to satisfy CDWR's scheduling instructions on a day ahead basis, subject to compliance with all instructions regarding Emergency Flow Order ("**EFO**") or Operational Flow Order ("**OFO**") conditions, which may require adjustment of previously given schedules. CDWR will pay or reimburse NCPA for all fuel costs, including commodity and transportation costs, surcharges and taxes, and all imbalance charges due to differences between day ahead nominations and real time usage. NCPA will not be responsible for any failure of the CTs to operate at the heat rate guaranteed by GE, and CDWR will look solely to GE to recover any costs due to failure to achieve a guaranteed heat rate. If a failure to achieve the guaranteed heat rate would result in a permit violation or would adversely impact NCPA's ability to operate the _____, NCPA may curtail the operation of the CTs in

	order to avoid such violation or adverse effect, and CDWR will hold NCPA harmless from any costs, penalties or liabilities as a result of such violation, adverse effect or curtailment. CDWR will comply with all EFO and OFO requirements and will be responsible for all costs, expenses, sanctions and penalties as a result of non-compliance, expect to the extent due to NCPA's gross negligence or willful misconduct, and will reimburse NCPA for all such costs promptly upon notice.
Term:	From commencement of testing and commissioning of the CTs through the earlier of the start of decommissioning or the termination of the Site Agreement
Compensation:	In addition to the reimbursement of costs described above, NCPA will receive (a) a scheduling and fuel management fee of Two Hundred Thousand Dollars ($200,000.00) for each calendar year (or part thereof) during the Term plus actual cost per MMBtu. The fixed portion of these fees will be payable in advance at the beginning of each calendar year. Service Provider will also be compensated for any additional services that it provides on a basis to be agreed, including, but not limited to, costs incurred by Service Provider in securing necessary transmission to deliver energy to the CAISO controlled grid. The Fee for 2021 will be payable upon execution of the definitive agreements, and the Fee for 2022 and 2023 will be payable on January 1, 2022 and January 1, 2023, respectively, or as may be agreed upon by the Parties.
Events of Default:	The Site Agreement will include customary events of default (following agreed notice and cure periods), including for non-payment of amounts due and breaches of covenants and representations, and remedies.
Indemnification Obligations:	In addition to customary indemnification obligations for breach of covenants or representations and for injuries to third parties or property, and without limiting CDWR's other payment and reimbursement obligations, to the extent allowed by law, CDWR will indemnify, defend, save and hold harmless Service Provider, and it's officers, agents and employees against all claims, expenses and liabilities arising out of (a) any challenges to or invalidation of any new or amended permits or licenses sought or obtained by Service Provider or any of its affiliates in connection with the installation or operation of the CTs, including legal expenses, expert fees and court costs, (b) any claims, assertions or determinations, including those based on non-compliance with the requirements of Public Resources Code Division 13 (commencing with Section 21000) or regulations adopted pursuant to that Division, that installation or operation of the CTs pursuant to any new or amended permits or licenses were illegal or not permitted by applicable law for any reason, including any fines, penalties or other sanctions and any costs of modifying or removing the CTs, (c) greenhouses gases, including any penalties, offset requirements, taxes and compliance costs, and (d) any environmental damage, costs or liabilities, including claims or monetary enforcement sanctions, costs and liabilities for cleanup or disposal of hazardous materials or for air emissions, arising from the installation, commissioning, operation or

	decommissioning of the CTs, except to the extent arising from Service Provider's gross negligence or willful misconduct.
Insurance:	CDWR and NCPA will each obtain and maintain general liability insurance and such other insurance as they may agree in amounts to be agreed or may provide proof of self-insurance.
Limited Recourse:	Except for gross negligence or willful misconduct, NCPA's liability under the Energy Services Agreement in any year will be limited to the amount of the scheduling and fuel management fees payable in such year. No Party will be liable to another Party for consequential or punitive damages.

RESOLUTION 21-86

RESOLUTION OF THE NORTHERN CALIFORNIA POWER AGENCY AUTHORIZING THE GENERAL MANAGER TO TAKE NECESSARY ACTION TO PROVIDE EMERGENCY ENERGY REQUIREMENTS TO PLUMAS-SIERRA RURAL ELECTRIC COOPERATIVE ("PLUMAS-SIERRA") INCLUDING PARTICIPATION IN THE DEPARTMENT OF WATER RESOURCES' PROGRAM TO ADD ADDITIONAL GENERATION AND SIDE LETTERS TO THE INTERCONNECTION AGREEMENT TO ALLOW ISLANDING OF PLUMAS'S SYSTEM

(reference Staff Report #213:21)

WHEREAS, at approximately 8:30 pm on July 21, 2021 Plumas-Sierra lost connection to the California Independent System Operator (CAISO) controlled grid due to impacts from the Dixie Fire; and

WHEREAS, on July 23, 2021 Governor Newsom signed a Proclamation of a State of Emergency due to the Dixie and Fly fires in Plumas County recognizing the significant impacts in Plumas County; and

WHEREAS, Governor Newsom's July 23, 2021 proclamation waived public contracting and bidding requirements; and

WHEREAS, Pacific Gas and Electric Company (PG&E) has reported significant damage to transmission lines, substations and related equipment serving Plumas-Sierra that may take 5 months or more to restore; and

WHEREAS, Plumas-Sierra is relying on backup generators, a small interconnection with Nevada Energy, and member conservation to maintain power throughout its service territory; and

WHEREAS, on July 30, 2021 Governor Newsom signed a Proclamation of a State of Emergency due to severe energy shortages throughout California that directed the Department of Water Resources (DWR) to assist local governments, utility companies, and others in contracting for procurement of projects that could expand energy supply and storage; and

WHEREAS, Governor Newsom's July 30, 2021, proclamation established emergency expedited review of new generation resources including natural gas through a California Energy Commission (CEC) program; and

WHEREAS, NCPA and Plumas-Sierra have identified a location for the 11.6 megawatts of new gas fired generation within Plumas-Sierra' service territory on a disturbed site, with a gas supply, available water and grid interconnection; and

WHEREAS, Governor Newsom designated DWR as the procurement entity for new generation and the supporting services needed to get that generation on line; and

WHEREAS, DWR established a Term Sheet for supporting the addition of new generation wherein DWR purchases the equipment and reimburses all expenses including NCPA labor and contractors to develop, procure, construct, interconnect, operate and maintain the generators; and

WHEREAS, this project will only be constructed if and upon determination by the CEC that it is consistent with Paragraph 10 of Governor Newsom's July 30, 2021 proclamation; and

WHEREAS, upon CEC determination of consistency with Paragraph 10 of Governor Newsome's July 30, 2021 proclamation, the provisions of Public Resources Code, Division 13 (commencing with Section 21000) and regulations adopted pursuant to that Division, are suspended, and the CEC will conduct any and all necessary environmental review; and

NOW, THEREFORE BE IT RESOLVED, that the Commission of the Northern California Power Agency adopts Resolution 21-86 authorizing the General Manager or his designee to award bids, execute agreements, issue purchase orders, enter into amendments to, new appendices or side agreements to the PG&E Interconnection Agreement and take all other actions necessary to provide emergency energy requirements to Plumas-Sierra Rural Electric Cooperative ("Plumas-Sierra") in the short-term and for the medium-term to develop and file license applications; secure land rights; and develop, engineer, procure, construct, operate and maintain generation resources in Plumas-Sierra' service territory materially consistent with the Term Sheet and pursuant to Governor Newsom's Proclamation of Energy Emergency and Proclamation of Dixie Fire Emergency.

PASSED, ADOPTED and APPROVED this ____ day of _____, 2021, by the following vote on roll call:

	Vote	Abstained	Absent
Alameda			
San Francisco BART			
Biggs			
Gridley			
Healdsburg			
Lodi			
Lompoc			
Palo Alto			
Port of Oakland			
Redding			
Roseville			
Santa Clara			
Shasta Lake			
Truckee Donner			
Ukiah			
Plumas-Sierra			

DAVID HAGELE
CHAIR

ATTEST: CARY A. PADGETT
ASSISTANT SECRETARY